INSTRUCTIONS
FOR
VARIABLE INCLINE CONVEYOR

MODEL NO.
VIB
SERIAL NO.

PPE Conveyors are manufactured and sold direct by Plastic Process Equipment, Inc. We are not associated with any other manufacturer except Budget Molder's Supply, Inc. Always specify genuine PPE or Budget Hi-Line conveyors! Do not accept substitutes.

Made in the U.S.A. by Plastic Process Equipment, Inc. © copyright 2006

PLASTIC PROCESS EQUIPMENT, INC. www.ppe.com • e-mail: sales@ppe.com

PPE WEST 6385 Montessouri Street, Las Vegas, Nevada 89113
702-433-6385 • 800-258-8877 • Fax: 702-433-6388

PPE SOUTH 11218 Challenger Avenue, Odessa, Florida 33556
727-834-8888 • 800-282-6783 • Fax: 727-834-8873

PPE 8303 CORPORATE PARK DRIVE, MACEDONIA (Cleveland), OHIO 44056, USA
216-367-7000 • **Toll Free: 800-321-0562** • Fax: 216-367-7022 • Order Fax: 800-223-8305

Toll Free: USA, Canada & Mexico **800-362-0706**

Thank you for purchasing a Variable Incline Conveyor from Plastic Process Equipment. This instruction booklet is intended as a guide for your new product. If you have additional questions, contact Plastic Process Equipment,Inc. at 1-800-321-0562.

RECEIVING

Thoroughly inspect your new conveyor before unpacking for setup. Report any damage to the motor freight carrier; they are responsible for damages incurred during transit.

ATTENTION!!

Please read through the entire booklet first.

You must be trained and authorized by your employer in the proper installation operation, maintenance and setup of your new equipment. ***Safety First Always!***

SETUP

(REQUIRES TWO PEOPLE)

Your new conveyor is crated and shipped from the factory in a horizontal position.

After uncrating:

1) Loosen the pivot bolts ***(see Figure 1)*** on both sides of the conveyor.

Figure 1

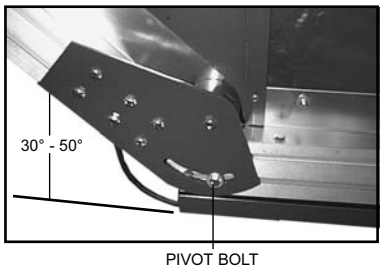

Elevate the incline end while pushing on the belt near the pivot point ***(see Figure 2)***.

Figure 2

2) Set conveyor at desired angle (between 30° and 50°) and retighten the pivot bolts (after setting the conveyor to the desired angle, the inclined end of the conveyor must be supported until the legs are inserted).
3) Loosen the leg brackets on the incline end of conveyor ***(see Figure 3)***. Adjust the leg brackets perpendicular to floor (at this time do not retighten leg brackets).
4) Raise the incline end high enough to insert the legs.
5) Insert the legs into the side brackets ***(see Figure 3)***, retighten bolts on leg bracket, and set the locking pins.
6) Lift the hopper end of the conveyor, insert the legs and set locking pins (all legs should be perpendicular to floor for proper conveyor operation-adjust conveyor to required position and height).

Figure 3

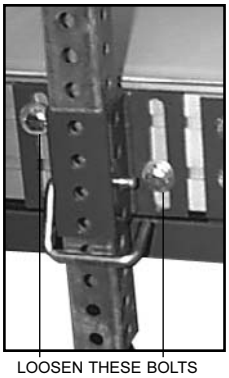

7) Remember to lock the casters after adjusting the conveyor and setting it into position.
8) Remove breather plug from motor.

ELECTRICAL

1) Always use a grounded 120 volt outlet and a suitable three wire grounded extension cord.
2) All conveyors are equipped with a starter switch and an overload protection heater properly sized for the drive motor. The On/Off switch on some models is resettable, should the switch get overloaded for some reason it may be necessary to reset it before the conveyor will run again. See switch cover for reset instructions.

WARNING DRIVE MOTOR

The standard 1/6hp 655 drive motor is not designed for repeated start stop operation, if you turn the conveyor on and off more than 10 times per hour you damage the motor by overheating. There are special order motors available for start/stop operations, please consult the factory.

CAUTION DURING USE AND OPERATION OF CONVEYOR

- Do not wear loose clothing or jewelry around the conveyor.
- Do not wear rings, necklaces, or jewelry.
- Long hair **must** be tied and netted.
- Keep all hands, arms, and fingers away from any moving parts except the conveyor belt surface.
- Never stand on the conveyor belt for any reason whatsoever.
- Do not operate any conveyor with the guards removed.
- Do not operate the conveyor with parts missing, removed, or in a disassembled state.
- Pay special attention to the ON-OFF switch location.
- Wear safety glasses if your company or process requires them.
- You must unplug the conveyor before performing any repairs or maintenance.
- If you are unsure about installation, operation, maintenance, or setup call PPE!

BELT ADJUSTMENT, TENSION & TRACKING

PPE conveyors feature automatic spring loaded belt tension adjustment. All conveyors and separators are thoroughly tested in our factory after final assembly. The belts are adjusted to track properly so **no adjustment will be necessary.** Because of the endless 2-ply monofilament belt (no lacing to snag or tear) and Vee-guide tracking, there should never be a tracking problem with a PPE conveyor.

LUBRICATION: CHAIN DRIVE UNITS

(BIC, FT, FS, VICB, PC 06, PC 12, PC 18, PC 24, PCS, PUC, VIB, ICG, PCS) PPE chain drive units use permanently lubricated drive chains that do not require lubrication. All bearings are permanently lubricated, therefore we do not provide a grease fitting.

BELT REPLACEMENT

(REQUIRES TWO PEOPLE)

1) Disconnect all power to the conveyor.
2) Adjust the conveyor to a 45° angle.
3) Remove the eight hopper bolts on top of frame ***(see Figure 4)*** and the two Allen head screws and the A-5470 plastic transition covers where the hopper meets the incline section.

Figure 4

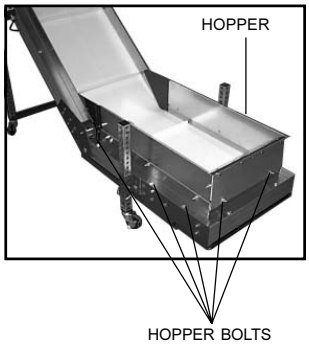

4) Remove hopper.
5) Remove end caps (and optional part drop tray if purchased).
6) Using a pencil draw a vertical line across the frame and side rails (used to align side rails during reassembly).
7) Loosen the bolts on the incline side rails **(DO NOT REMOVE BOLTS)**.
8) Slide the incline side rails off of the conveyor.
9) Place conveyor on it's side (drive side down), conveyor must be elevated to clear on/off switch.
10) Remove leg pins and remove upper and lower legs.
11) Mark the edge of the motor assembly plates against the frame on the non-drive side on the hopper end (***see Figure 5*** - overlap is preset at 3-1/4") (make sure you align the frame overlap with your marks during reassembly). **DO NOT LOOSEN ANY ALLEN HEAD BOLTS!**

Figure 5

12) Remove plate on non-drive side ***(see Figure 6)***.

Figure 6

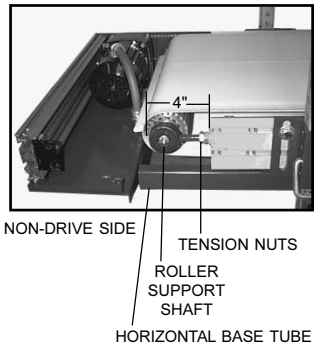

13) Loosen the bolts holding the horizontal base tube on the non-drive side. Slide the horizontal base tube off.
14) Remove belt edges from transition pivot rollers and from bottom extrusion track.
15) While compressing the roller on the non-drive end, pull the belt half way up and off of the drive roller.
16) Continue compressing the non-drive roller while pulling the belt halfway off the non-drive end. When belt is halfway off both ends, it can be removed the rest of the way.

CAUTION:
ROLLER AND ENDS UNDER SPRING TENSION!

17) To reassemble conveyor, follow instructions in reverse order. When reinstalling the belt, the Vee-Guide on the bottom of the belt is seated in the groove of the rollers.
18) After installing the new belt and reassembling the conveyor, return conveyor to required height and angle of operation.

WARRANTY

All PPE Conveyors have a full **two year warranty**. This warranty doesn't include conveyor belts because they are subject to excessive wear damage and abuse by the user. This Warranty should not extend to goods subjected to misuse, abuse, neglect, accident or improper installation or maintenance, or products or goods which have been altered, modified or repaired by anyone other than seller or its authorized and approved representatives.

PLASTIC PROCESS EQUIPMENT, INC. www.ppe.com • e-mail: sales@ppe.com
PPE WEST 6385 Montessouri Street, Las Vegas, Nevada 89113
702-433-6385 • 800-258-8877 • Fax: 702-433-6388
PPE SOUTH 11218 Challenger Avenue, Odessa, Florida 33556
727-834-8888 • 800-282-6783 • Fax: 727-834-8873
PPE 8303 CORPORATE PARK DRIVE, MACEDONIA (Cleveland), OHIO 44056, USA
216-367-7000 • Toll Free: 800-321-0562 • Fax: 216-367-7022 • Order Fax: 800-223-8305
Toll Free: USA, Canada & Mexico 800-362-0706

VIB CONVEYOR PARTS

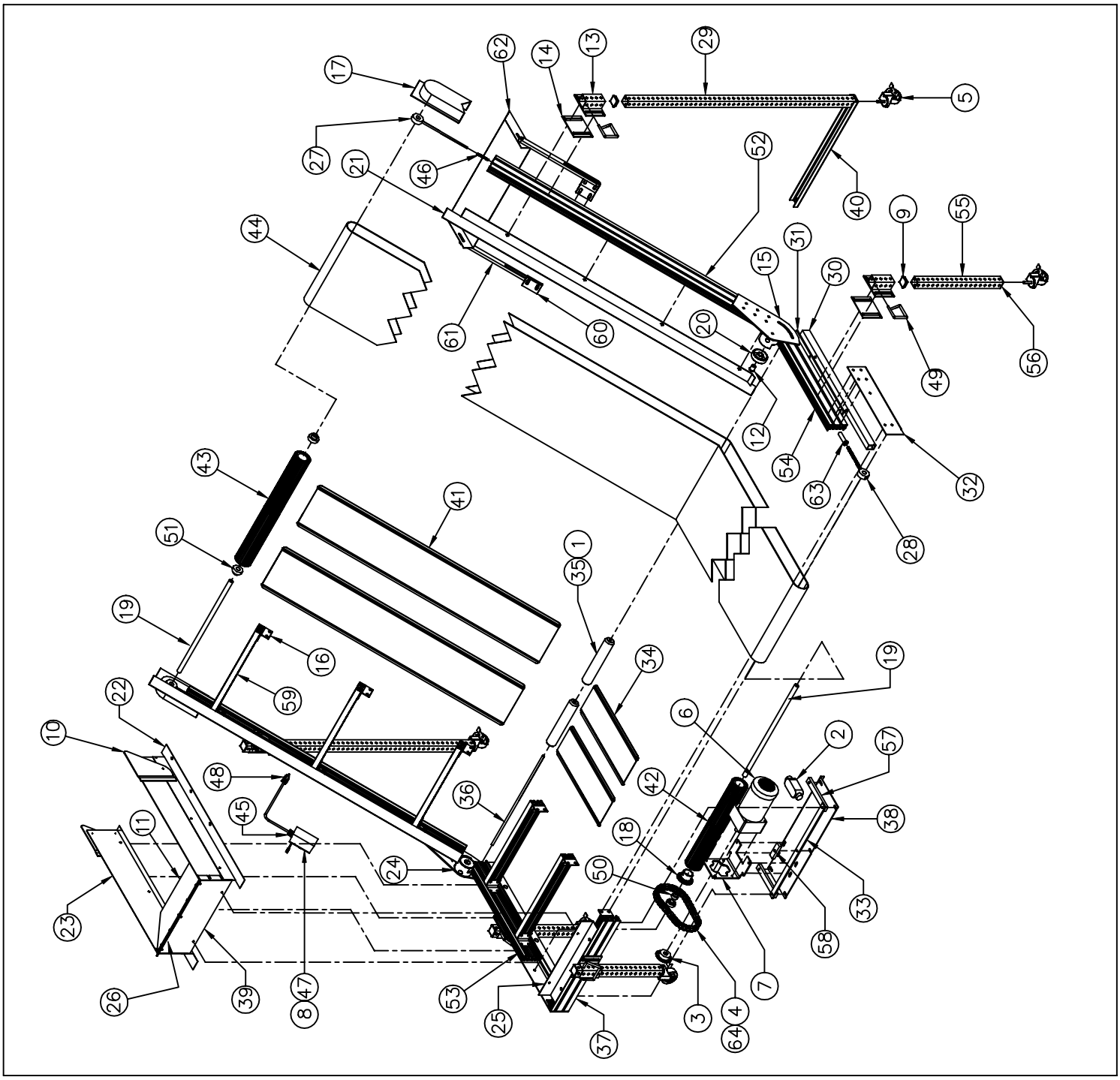

PLASTIC PROCESS EQUIPMENT, INC.

8303 Corporate Park Drive, Macedonia (CLEVELAND), OHIO 44056
(216) 367-7000 TOLL FREE: 800-321-0562 FAX (216) 367-7022 ORDER FAX: 800-223-8305 EMAIL: SALES@PPE.COM

6385 Montessouri Street, Las Vegas, Nevada 89113
(702) 433-6385 TOLL FREE: 800-258-8877
FAX: (702) 433-6388

11218 Challenger Ave., Odessa, FL 33556
(727) 834-8888 TOLL FREE: 800-282-6783
FAX: (727) 834-8873

VIB CONVEYORS
PARTS LIST 12"

02/12/2014

10:30:22 AM

ID	P/N	DESCRIPTION	UOM	
OPTIONAL	6183	1/4HP GEARMOTOR DC VERSION OF 655	EA	
OPTIONAL	0791B	0781 BODINE VARIABLE SPEED CONTROL W/12FT CORD	EA	
OPTIONAL	C-6909-1	VARIABLE SPEED MOUNTING BRACKET FLAT FOR MM23101C	EA	
1	1416D-1/2	TRANSITION ROLLER END CAP FOR SIV/VIB	EA	
2	30432	JUNCTION BOX	EA	
3	35BS19HTX3/4	#35 HARDENED SPROCKET KEYED W/SET SCREW	EA	
4	35C	#35 CHAIN PER FOOT	EA	
5	CW4	CASTERS WITH LOCK	EA	
6	655	655 1/6HP BODINE GEARMOTOR	EA	
7	655L	L BRACKET FOR 655 MOTOR	EA	
8	CR101Y11	SWITCH WITH PILOT LIGHT	EA	
9	VG-560-1.5-11	CAP FOR SP/SI/SIV/VIB LEGS	EA	
10	A-5470	PLASTIC TRANSITION COVER FOR SIV/VIB (set)	EA	
11	A-5474-12	PLASTIC FLAPPER 12" FOR SIV/VIB (WHITE)	EA	
12 KIT	A-5476K	PLASTIC WHEEL, ROLLER HUB WITH STUD, WASHER, AND NUT (SET LEFT&RIGHT)	EA	
13	A-5477	LEG MOUNTING BRACKET FOR SP, SI, SIV/VIB	EA	
14	A-5480	LEG MOUNTING BRACKET SPACER FOR SP, SI, SIV/VIB	EA	
15	A-5481	SWIVEL PLATE FOR SIV/VIB	EA	
16	A-5486	FRAME "L" BRACKET FOR SI, SP, & SIV/VIB	EA	
17	A-6850	PLASTIC BEARING COVER	EA	
18	A-5959	MACHINED SPROCKET FOR CONVEYOR	EA	
19	A-5982-12	SHAFTS FOR CONVEYORS 12"	EA	
20	A-6987	TRANSITION ROLLER FOR VIB/SIV	EA	
21	B-6885	UPPER SIDE RAILS ALUM FOR VIB (set)	SET	
22	B-5441-3	ALUM SIDE RAIL FOR SIV (SET) , INCLUDES ANODIZE	SET	
23	B-5442-3	ALUM LOWER SIDE RAIL FOR SIV/VIB (SET)	SET	
24	B-5471	ALUM ROLLER COVER FOR SIV/VIB (SET)	EA	
25	B-5472-12	ALUM FLAPPER ANGLE FOR SIV/VIB 12"	EA	
26	B-5475-12	FLAPPER HINGE 12" FOR SIV/VIB	EA	
27	B-5478	TENSION ADJUSTMENT ROD FOR SIV/VIB (OLD STYLE) 3/8"	EA	
27	B-10164	TENSION ADJUSTMENT ROD FOR SIV/VIB NEW STYLE 1/2"	EA	
28	B-5479	TENSION ADJUSTMENT ROD FOR SI SIV/VIB & SP	EA	
29	B-5483-48	LEG TUBE ONLY FOR SI & SIV/VIB 48"	EA	
30	B-5487-2	HORIZONTAL MOUNT FOR SIV/VIB 2'	EA	
31	B-5488-2	HORIZONTAL SPACER FOR SIV/VIB 2'	EA	
32	B-5490	DRIVE SIDE PLATE FOR SIV (SET)	SET	
33	B-5491-12	PLASTIC END RAIL SPACER FOR SIV/VIB 12"	EA	
34	B-5494-2-12G	GALV LOWER BEDDING FOR SIV/VIB 2' X 12"	EA	
35	B-5504-12	TRANSITION ROLLER TUBE FOR SIV/VIB 12"	EA	
36	B-5516-12	TRANSITION ROLLER SHAFT FOR SIV/VIB 12"	EA	
37	B-5566-12	FRAME END FOR SIV/VIB 12"	EA	
38	B-5623-12	MOTOR BASE PLATE 12" FOR SIV/VIB	EA	
39	B-5626-12	ALUM FLAPPER MOUNT 12" FOR SIV/VIB	EA	
40	B-5627-12	STAND CROSSBRACE 12" FOR SI, SIV/VIB	EA	
41	B-7026-12G	GALV BEDDING FOR VIB	EA	
42	B-5984-12	DRIVE ROLLER (DOES NOT INCLUDE BEARINGS) 12"	EA	
43	B-5998-12	IDLER ROLLER (DOES NOT INCLUDE BEARINGS) 12"	EA	
44	BELT	BELT	EA	
45	SEC50BA	STRAIN RELIEF FOR ELECTRIC CORD	EA	
46	DS-232	BELT ADJUSTMENT SPRINGS 22" OLD STYLE PRE 9/07	EA	
46	DS-233	BELT ADJUSTMENT SPRINGS 11" NEW STYLE 9/07	EA	
47	FUSE	FUSE	EA	
48	K5152	K5152 12' POWER CORD	EA	
49	T092	LOCK PIN	EA	
50	RAL012NPP+COL	SPROCKET BEARING w/COLLAR FOR SP, SI, SIV/VIB	EA	
51	YA012RR	BEARINGS FOR SP, SI, SIV/VIB CONVEYOR	EA	
52	B-7027	UPPER FRAME SIDE FOR VIB	EA	
53	B-7028	HORIZONTAL RIGHT SIDE FRAME FOR VIB	EA	
54	B-7038	HORIZONTAL LEFT SIDE FRAME FOR VIB	EA	
55	B-5483-18	LEG TUBE ONLY FOR SI 18"	EA	
56	VG5538B12	LEG THREADED INSERT FOR CONVEYOR LEGS	EA	
57	A-6549A	STEEL MOTOR PLATE SPACER FOR SIV/VIB	EA	
58	A-6549B	STEEL MOTOR PLATE SPACER FOR SIV/VIB	EA	
59	B-5985-12	CROSS MEMBER 12"	EA	
60	A-5980	PLASTIC BUSHING	EA	
61	A-6902	CONVEYOR TRAY BRACKET	EA	
62	B-4016	FS ATTACHMENT ADJ BAR (set)	EA	
63	A-6453-12	SS TRAY 12"	EA	
64	35ML	#35 MASTER LINK	EA	

SEE BELT SHEET FOR BELTS

VIB CONVEYORS

02/12/2014

PARTS LIST 18"

ID	P/N	DESCRIPTION	UOM	
OPTIONAL	6183	1/4HP GEARMOTOR DC VERSION OF 655	EA	
OPTIONAL	0791B	0781 BODINE VARIABLE SPEED CONTROL W/12FT CORD	EA	
OPTIONAL	C-6909-1	VARIABLE SPEED MOUNTING BRACKET FLAT FOR MM23101C	EA	
1	1416D-1/2	TRANSITION ROLLER END CAP FOR SIV/VIB	EA	
2	30432	JUNCTION BOX	EA	
3	35BS19HTX3/4	#35 HARDENED SPROCKET KEYED W/SET SCREW	EA	
4	35C	#35 CHAIN PER FOOT	EA	
5	CW4	CASTERS WITH LOCK	EA	
6	655	655 1/6HP BODINE GEARMOTOR	EA	
7	655L	L BRACKET FOR 655 MOTOR	EA	
8	CR101Y11	SWITCH WITH PILOT LIGHT	EA	
9	VG-560-1.5-11	CAP FOR SP/SI/SIV/VIB LEGS	EA	
10	A-5470	PLASTIC TRANSITION COVER FOR SIV/VIB (set)	EA	
11	A-5474-18	PLASTIC FLAPPER 18" FOR SIV/VIB	EA	
12 KIT	A-5476K	PLASTIC WHEEL, ROLLER HUB WITH STUD, WASHER, AND NUT (SET LEFT&RI	EA	
13	A-5477	LEG MOUNTING BRACKET FOR SP, SI, SIV/VIB	EA	
14	A-5480	LEG MOUNTING BRACKET SPACER FOR SP, SI, SIV/VIB	EA	
15	A-5481	SWIVEL PLATE FOR SIV/VIB	EA	
16	A-5486	FRAME "L" BRACKET FOR SI, SP, & SIV/VIB	EA	
17	A-6850	PLASTIC BEARING COVER	EA	
18	A-5959	MACHINED SPROCKET FOR CONVEYOR	EA	
19	A-5982-18	SHAFTS FOR CONVEYORS 18"	EA	
20	A-6987	TRANSITION ROLLER FOR VIB/SIV	EA	
21	B-6885	UPPER SIDE RAILS ALUM FOR VIB (set)	SET	
22	B-5441-3	ALUM SIDE RAIL FOR SIV (SET) , INCLUDES ANODIZE	SET	
23	B-5442-3	ALUM LOWER SIDE RAIL FOR SIV/VIB (SET)	SET	
24	B-5471	ALUM ROLLER COVER FOR SIV/VIB (SET)	EA	
25	B-5472-18	ALUM FLAPPER ANGLE FOR SIV/VIB 18"	EA	
26	B-5475-18	FLAPPER HINGE 18" FOR SIV/VIB	EA	
27	B-5478	TENSION ADJUSTMENT ROD FOR SIV/VIB (OLD STYLE) 3/8"	EA	
27	B-10164	TENSION ADJUSTMENT ROD FOR SIV/VIB NEW STYLE 1/2"	EA	
28	B-5479	TENSION ADJUSTMENT ROD FOR SI SIV/VIB & SP	EA	
29	B-5483-48	LEG TUBE ONLY FOR SI & SIV/VIB 48"	EA	
30	B-5487-2	HORIZONTAL MOUNT FOR SIV/VIB 2'	EA	
31	B-5488-2	HORIZONTAL SPACER FOR SIV/VIB 2'	EA	
32	B-5490	DRIVE SIDE PLATE FOR SIV (SET)	SET	
33	B-5491-18	PLASTIC END RAIL SPACER FOR SIV/VIB 18"	EA	
34	B-5494-2-18G	GALV LOWER BEDDING FOR SIV/VIB 2' X 18"	EA	
35	B-5504-18	TRANSITION ROLLER TUBE FOR SIV/VIB 18"	EA	
36	B-5516-18	TRANSITION ROLLER SHAFT FOR SIV/VIB 18"	EA	
37	B-5566-18	FRAME END FOR SIV/VIB 18"	EA	
38	B-5623-18	MOTOR BASE PLATE 18" FOR SIV/VIB	EA	
39	B-5626-18	ALUM FLAPPER MOUNT 18" FOR SIV/VIB	EA	
40	B-5627-18	STAND CROSSBRACE 18" FOR SI, SIV/VIB	EA	
41	B-7026-18G	GALV BEDDING FOR VIB	SET	
42	B-5984-18	DRIVE ROLLER (DOES NOT INCLUDE BEARINGS) 18"	EA	
43	B-5998-18	IDLER ROLLER (DOES NOT INCLUDE BEARINGS) 18"	EA	
44	BELT	BELT	EA	
45	SEC50BA	STRAIN RELIEF FOR ELECTRIC CORD	EA	
46	DS-232	BELT ADJUSTMENT SPRINGS 22" OLD STYLE PRE 9/07	EA	
27	DS-233	BELT ADJUSTMENT SPRINGS 11" NEW STYLE 9/07	EA	
47	FUSE	FUSE	EA	
48	K5152	K5152 12' POWER CORD	EA	
49	T092	LOCK PIN	EA	
50	RAL012NPP+COL	SPROCKET BEARING w/COLLAR FOR SP, SI, SIV/VIB	EA	
51	YA012RR	BEARINGS FOR SP, SI, SIV/VIB CONVEYOR	EA	
52	B-7027	UPPER FRAME SIDE FOR VIB	EA	
53	B-7028	HORIZONTAL RIGHT SIDE FRAME FOR VIB	EA	
54	B-7038	HORIZONTAL LEFT SIDE FRAME FOR VIB	EA	
55	B-5483-18	LEG TUBE ONLY FOR SI 18"	EA	
56	VG5538B12	LEG THREADED INSERT FOR CONVEYOR LEGS	EA	
57	A-6549A	STEEL MOTOR PLATE SPACER FOR SIV/VIB	EA	
58	A-6549B	STEEL MOTOR PLATE SPACER FOR SIV/VIB	EA	
59	B-5985-18	CROSS MEMBER 18"	EA	
60	A-5980	PLASTIC BUSHING	EA	
61	A-6902	CONVEYOR TRAY BRACKET	EA	
62	B-4016	FS ATTACHMENT ADJ BAR (set)	EA	
63	A-6453-18	SS TRAY 18"	EA	
64	35ML	#35 MASTER LINK	EA	

SEE BELT SHEET FOR BELTS

VIB CONVEYORS

02/12/2014

PARTS LIST 24"

ID	P/N	DESCRIPTION	UOM	
OPTIONAL	6183	1/4HP GEARMOTOR DC VERSION OF 655	EA	
OPTIONAL	0791B	0781 BODINE VARIABLE SPEED CONTROL W/12FT CORD	EA	
OPTIONAL	C-6909-1	VARIABLE SPEED MOUNTING BRACKET FLAT FOR MM23101C	EA	
1	1416D-1/2	TRANSITION ROLLER END CAP FOR SIV/VIB	EA	
2	30432	JUNCTION BOX	EA	
3	35BS19HTX3/4	#35 HARDENED SPROCKET KEYED W/SET SCREW	EA	
4	35C	#35 CHAIN PER FOOT	EA	
5	CW4	CASTERS WITH LOCK	EA	
6	655	655 1/6HP BODINE GEARMOTOR	EA	
7	655L	L BRACKET FOR 655 MOTOR	EA	
8	CR101Y11	SWITCH WITH PILOT LIGHT	EA	
9	VG-560-1.5-11	CAP FOR SP/SI/SIV/VIB LEGS	EA	
10	A-5470	PLASTIC TRANSITION COVER FOR SIV/VIB (set)	EA	
11	A-5474-24	PLASTIC FLAPPER 24" FOR SIV/VIB	EA	
12 KIT	A-5476K	PLASTIC WHEEL, ROLLER HUB WITH STUD, WASHER, AND NUT (SET LEFT&RIG	EA	
13	A-5477	LEG MOUNTING BRACKET FOR SP, SI, SIV/VIB	EA	
14	A-5480	LEG MOUNTING BRACKET SPACER FOR SP, SI, SIV/VIB	EA	
15	A-5481	SWIVEL PLATE FOR SIV/VIB	EA	
16	A-5486	FRAME "L" BRACKET FOR SI, SP, & SIV/VIB	EA	
17	A-6850	PLASTIC BEARING COVER	EA	
18	A-5959	MACHINED SPROCKET FOR CONVEYOR	EA	
19	A-5982-24	SHAFTS FOR CONVEYORS 24"	EA	
20	A-6987	TRANSITION ROLLER FOR VIB/SIV	EA	
21	B-6885	UPPER SIDE RAILS ALUM FOR VIB (set)	SET	
22	B-5441-3	ALUM SIDE RAIL FOR SIV (SET) , INCLUDES ANODIZE	SET	
23	B-5442-3	ALUM LOWER SIDE RAIL FOR SIV/VIB (SET)	SET	
24	B-5471	ALUM ROLLER COVER FOR SIV/VIB (SET)	EA	
25	B-5472-24	ALUM FLAPPER ANGLE FOR SIV/VIB 24"	EA	
26	B-5475-24	FLAPPER HINGE 24" FOR SIV/VIB	EA	
27	B-5478	TENSION ADJUSTMENT ROD FOR SIV/VIB (OLD STYLE) 3/8"	EA	
27	B-10164	TENSION ADJUSTMENT ROD FOR SIV/VIB NEW STYLE 1/2"	EA	
28	B-5479	TENSION ADJUSTMENT ROD FOR SI SIV/VIB & SP	EA	
29	B-5483-48	LEG TUBE ONLY FOR SI & SIV/VIB 48"	EA	
30	B-5487-2	HORIZONTAL MOUNT FOR SIV/VIB 2'	EA	
31	B-5488-2	HORIZONTAL SPACER FOR SIV/VIB 2'	EA	
32	B-5490	DRIVE SIDE PLATE FOR SIV (SET)	SET	
33	B-5491-24	PLASTIC END RAIL SPACER FOR SIV/VIB 24"	EA	
34	B-5494-2-24G	GALV LOWER BEDDING FOR SIV/VIB 2' X 24"	EA	
35	B-5504-24	TRANSITION ROLLER TUBE FOR SIV/VIB 24"	EA	
36	B-5516-24	TRANSITION ROLLER SHAFT FOR SIV/VIB 24"	EA	
37	B-5566-24	FRAME END FOR SIV/VIB 24"	EA	
38	B-5623-24	MOTOR BASE PLATE 24" FOR SIV/VIB	EA	
39	B-5626-24	ALUM FLAPPER MOUNT 24" FOR SIV/VIB	EA	
40	B-5627-24	STAND CROSSBRACE 24" FOR SI, SIV/VIB	EA	
41	B-7026-24G	GALV BEDDING FOR VIB	SET	
42	B-5984-24	DRIVE ROLLER (DOES NOT INCLUDE BEARINGS) 24"	EA	
43	B-5998-24	IDLER ROLLER (DOES NOT INCLUDE BEARINGS) 24"	EA	
44	BELT	BELT	EA	
45	SEC50BA	STRAIN RELIEF FOR ELECTRIC CORD	EA	
46	DS-232	BELT ADJUSTMENT SPRINGS 22" OLD STYLE PRE 9/07	EA	
27	DS-233	BELT ADJUSTMENT SPRINGS 11" NEW STYLE 9/07	EA	
47	FUSE	FUSE	EA	
48	K5152	K5152 12' POWER CORD	EA	
49	T092	LOCK PIN	EA	
50	RAL012NPP+COL	SPROCKET BEARING w/COLLAR FOR SP, SI, SIV/VIB	EA	
51	YA012RR	BEARINGS FOR SP, SI, SIV/VIB CONVEYOR	EA	
52	B-7027	UPPER FRAME SIDE FOR VIB	EA	
53	B-7028	HORIZONTAL RIGHT SIDE FRAME FOR VIB	EA	
54	B-7038	HORIZONTAL LEFT SIDE FRAME FOR VIB	EA	
55	B-5483-18	LEG TUBE ONLY FOR SI 18"	EA	
56	VG5538B12	LEG THREADED INSERT FOR CONVEYOR LEGS	EA	
57	A-6549A	STEEL MOTOR PLATE SPACER FOR SIV/VIB	EA	
58	A-6549B	STEEL MOTOR PLATE SPACER FOR SIV/VIB	EA	
59	B-5985-24	CROSS MEMBER 24"	EA	
60	A-5980	PLASTIC BUSHING	EA	
61	A-6902	CONVEYOR TRAY BRACKET	EA	
62	B-4016	FS ATTACHMENT ADJ BAR (set)	EA	
63	A-6453-24	SS TRAY 24"	EA	
64	35ML	#35 MASTER LINK	EA	

SEE BELT SHEET FOR BELTS