INSTRUCTIONS
CONVEYORS & SEPARATORS

Bottle & Parts

Conveyor/Separator Combination

Inclined & Infeed Combo

Vee-Guide Tracking

FIC Conveyor

Granulator Feed

Inclined

Parts Conveyor

MODEL NO.

SERIAL NO.

PPE Conveyors are manufactured and sold direct by Plastic Process Equipment, Inc. We are not associated with any other manufacturer except Budget Molder's Supply, Inc. Always specify genuine PPE or Budget Hi-Line conveyors! Do not accept substitutes.

Made in the U.S.A. by Plastic Process Equipment, Inc. © copyright 2006

PLASTIC PROCESS EQUIPMENT, INC. www.ppe.com • e-mail: sales@ppe.com

PPE WEST 6385 Montessouri Street, Las Vegas, Nevada 89113
702-433-6385 • 800-258-8877 • Fax: 702-433-6388

PPE SOUTH 11218 Challenger Avenue, Odessa, Florida 33556
727-834-8888 • 800-282-6783 • Fax: 727-834-8873

PPE 8303 CORPORATE PARK DRIVE, MACEDONIA (Cleveland), OHIO 44056, USA
216-367-7000 • **Toll Free: 800-321-0562** • Fax: 216-367-7022 • Order Fax: 800-223-8305

Toll Free: USA, Canada & Mexico **800-362-0706**

Thank you for purchasing a conveyor or separator from Plastic Process Equipment, Inc. These instructions are intended as a guide for your new product. If you have any additional questions, contact PPE at 800-321-0562.

RECEIVING

Thoroughly inspect your new conveyor or separator before unpacking it for set up. Report any damage to the motor freight carrier; they are responsible for damages incurred during transit.

ATTENTION!!

Please read through the entire booklet first.

You must be trained and authorized by your employer in the proper installation operation, maintenance and set-up of your new equipment. ***Safety First Always!***

ELECTRICAL

All conveyors and separators are equipped with a starter switch and an overload protection heater. A grounded 120 volt outlet and a three wire grounded extension cord must be used at all times.

The On/Off switches on some models are resettable, should the switch get overloaded for some reason it may be necessary to reset it before the conveyor will run again. See switch cover for reset instructions.

WARNING DRIVE MOTOR

The standard 1/6hp 655 drive motor is not designed for repeated start stop operation, if you turn the conveyor on and off more than 10 times per hour you damage the motor by overheating. There are special order motors available for start/stop operations, please consult the factory.

CAUTION DURING USE AND OPERATION OF CONVEYORS OR SEPARATORS

- Do not wear loose clothing or jewelry around the conveyor.
- Do not wear rings, necklaces, or jewelry.
- Long hair **must** be tied and netted.
- Keep all hands, arms, and fingers away from any moving parts except the conveyor belt surface.
- Never stand on the conveyor belt for any reason whatsoever.
- Do not operate any conveyor with the guards removed.
- Do not operate the conveyor with parts missing, removed, or in a disassembled state.
- Pay special attention to the ON-OFF switch location.
- Wear safety glasses if your company or process requires them.
- You must unplug the conveyor before performing any repairs or maintenance.
- If you are unsure about installation, operation, maintenance, or setup call PPE!

TYPES OF CONVEYORS

PPE carries both V-Belt and non V-Belt Conveyors. The easiest way to tell if your conveyor is a V-Belt is by the serial number. If there is a "V" in the serial number your conveyor is a V-Belt. **EXAMPLE:** the serial number PC1812**V**251439 is a conveyor with the V-Belt system (note the V in the serial number). If the serial number on your conveyor has an **R** or an **A** following the **V**, your conveyor has direct drive. **EXAMPLE:** PC 182V**R**251439 is a direct drive conveyor.

BELT TRACKING AND TENSION

All conveyors and separators are thoroughly tested in our factory after final assembly. Although the belts are adjusted to track properly with the right amount of tension, some adjustments may be necessary during use. For best results and longevity of the drive components, the belt should be run with the **LEAST** tension needed to transport the load without slipping. If the belt is too loose, it will slip causing wear to the belt's underside. **CAUTION: DO NOT OVERTIGHTEN THE CONVEYOR BELT.** An overtightened belt will cause premature failure of your bearings, shafts and, on some models, the drive unit.

BELT TRACKING: THE V-BELT STYLE

The V-Belt tracking system keeps your belt centered and tracking properly. No adjustment should be necessary if both take up bolts are adjusted the same amount during belt tension adjustment. To check the tracking of your belt, measure the take up bolts on both sides of the conveyor. The distance between the center of the roller shaft and the bracket behind the locking nut ***(see Figure 1)*** should be the same for both bolts.

Figure 1

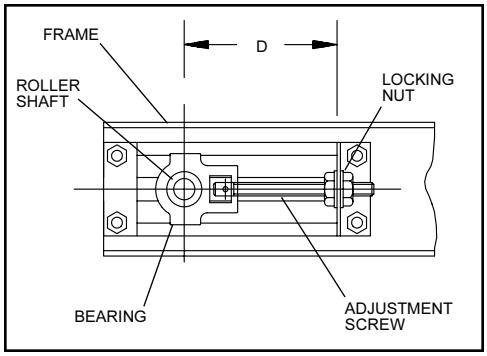

PLASTIC PROCESS EQUIPMENT, INC.
www.ppe.com • e-mail: sales@ppe.com
PPE WEST 6385 Montessouri Street, Las Vegas, Nevada 89113
702-433-6385 • 800-258-8877 • Fax: 702-433-6388
PPE SOUTH 11218 Challenger Avenue, Odessa, Florida 33556
727-834-8888 • 800-282-6783 • Fax: 727-834-8873
PPE 8303 CORPORATE PARK DRIVE, MACEDONIA (Cleveland), OHIO 44056, USA
216-367-7000 • Toll Free: 800-321-0562 • Fax: 216-367-7022 • Order Fax: 800-223-8305
Toll Free: USA, Canada & Mexico 800-362-0706

For another quick check, place a carpenter's square along the frame and belt of your conveyor. If it is tracking properly, the carpenter's square will fit snugly in the corner ***(see Figure 2)***. If your conveyor is not tracking properly, adjust

Figure 2

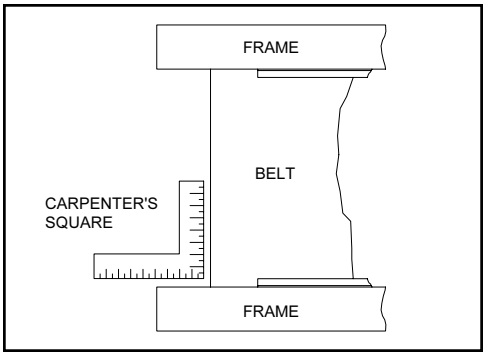

the locking nuts on both sides until they are equal. **BE CAREFUL NOT TO OVERTIGHTEN!**

BELT TRACKING: NON V-BELT CONVEYORS

Check to ensure your conveyor is tracking properly. If your belt drifts to the left or right, it needs adjustment. To adjust your belt, loosen the locking nuts on each side of the conveyor ***(see Figure 1)***. With the conveyor operating, tighten the tension screw on the side of the drift 1/4 turn **(EXAMPLE:** if your belt drifts to the right, tighten the right take-up screw approximately 1/4 turn). Wait several minutes to allow the belt to drift and reposition on the rollers. Continue to adjust the appropriate take up bolt until the belt tracks evenly on both sides. **DO NOT OVERTIGHTEN THE CONVEYOR BELT!** If necessary, reset the belt tracking by loosening the opposite side. Once the belt tracking is complete, be sure to lock the take up adjustment screws with the locking nut.

LUBRICATION: DIRECT DRIVE UNITS

PPE conveyors and separators (FIC, FT, ICB, PC-06, PC, PUC, SCI and FS Separator) have two drive bearings (the bearings at the motor end of the conveyor), and the take-up bearing (at the opposite end of the conveyor). All bearings are permanently lubricated, therefore we do not provide a grease fitting. Our experience has shown conveyor users tend to over grease bearings to the point where grease works it's way between the rollers and belts causing serious problems of contamination and belt slippage.

LUBRICATION: CHAIN DRIVE UNITS

(BIC, FT, FS, VICB, PC 06, PC 12, PC 18, PC 24, PCS, PUC, VIB, ICG, PCS) PPE chain drive units use permanently lubricated drive chains that do not require lubrication. All bearings are permanently lubricated, therefore we do not provide a grease fitting.

CAUTION:
DO NOT ALLOW LUBRICATION TO GET ON THE UNDERSIDE OF THE BELT.

CAUTION:
BEARINGS SHOULD NOT RUN CONTINUOUS AT TEMPERATURES OVER 200°F AND SHOULD NEVER EXCEED 225°F FOR INTERMITTENT OPERATIONS.

PCS SEPARATOR ATTACHMENTS

The PCS separator is driven off of the main conveyor unit using a belt drive system. This allows slippage if the separator roller unit were to catch on something. **DO NOT OVERTIGHTEN** the drive belt, it should have just enough tension to drive the roller. This is a safety feature.

WARRANTY

All PPE Conveyors have a full **two year warranty**. This warranty doesn't include conveyor belts because they are subject to excessive wear damage and abuse by the user. This Warranty should not extend to goods subjected to misuse, abuse, neglect, accident or improper installation or maintenance, or products or goods which have been altered, modified or repaired by anyone other than seller or its authorized and approved representatives.

PLASTIC PROCESS EQUIPMENT, INC. www.ppe.com • e-mail: sales@ppe.com
PPE WEST 6385 Montessouri Street, Las Vegas, Nevada 89113
702-433-6385 • 800-258-8877 • Fax: 702-433-6388
PPE SOUTH 11218 Challenger Avenue, Odessa, Florida 33556
727-834-8888 • 800-282-6783 • Fax: 727-834-8873
PPE 8303 CORPORATE PARK DRIVE, MACEDONIA (Cleveland), OHIO 44056, USA
216-367-7000 • Toll Free: 800-321-0562 • Fax: 216-367-7022 • Order Fax: 800-223-8305
Toll Free: USA, Canada & Mexico 800-362-0706

SCI CONVEYOR PARTS

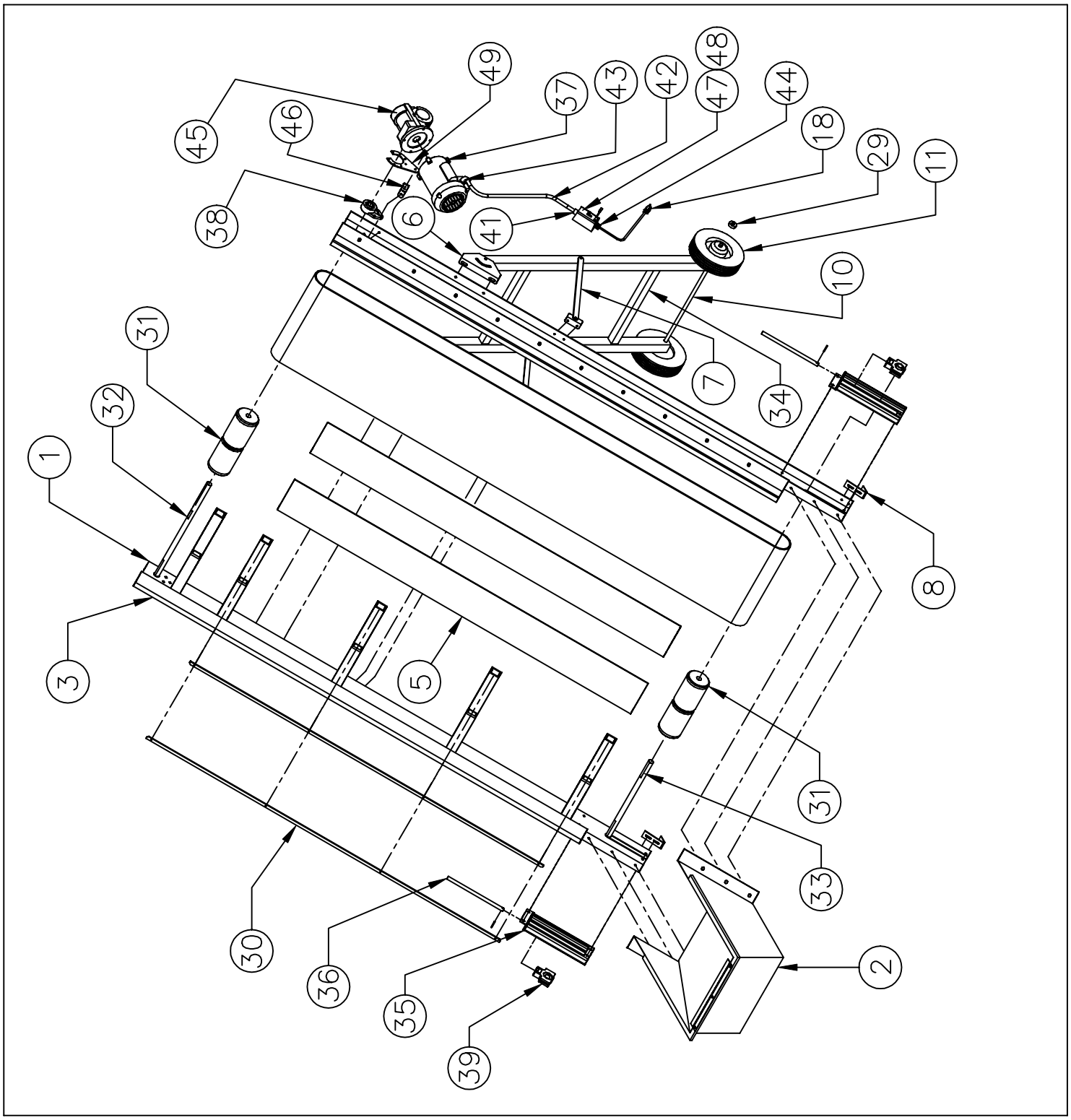

PLASTIC PROCESS EQUIPMENT, INC.

8303 Corporate Park Drive, Macedonia (CLEVELAND), OHIO 44056
(216) 367-7000 TOLL FREE: 800-321-0562 FAX (216) 367-7022 ORDER FAX: 800-223-8305 EMAIL: SALES@PPE.COM

6385 Montessouri Street, Las Vegas, Nevada 89113
(702) 433-6385 TOLL FREE: 800-258-8877
FAX: (702) 433-6388

11218 Challenger Ave., Odessa, FL 33556
(727) 834-8888 TOLL FREE: 800-282-6783
FAX: (727) 834-8873

SCI CONVEYORS
PARTS LIST

09/16/15

ID	P/N	DESCRIPTION	UOM	
OPTIONAL	0791B	0791B BODINE VARIABLE SPEED CONTROL W/12FT CORD	EA	
OPTIONAL	MM23101C	VARI SPEED CONTROL MINARIK	EA	
OPTIONAL	C-6909-3	VARIABLE SPEED MOUNTING BRACKET 45° FOR MM23101C	EA	
OPTIONAL	098004	1/3 HP DC LEESON MOTOR	EA	
OPTIONAL	098000	1/2 HP DC LEESON MOTOR	EA	
OPTIONAL	GB20-1	RIGHT ANGLE GEAR BOX 20:1 RATIO w/REACTION ARM	EA	
1	D-2016-(LENGTH)	ALUMINUM CHANNEL FRAME	EA	
2	D-1530A	MILD STEEL HOPPER FOR SCI 18"	EA	
2	D-1530B	STAINLESS FLAPPER FOR SCI 18"	EA	
3	D-2022	SIDERAILS FOR SCI (SET) MILD STEEL	EA	
5	B-1285	BEDDING	EA	
6	B-1654	LEG MOUNTING BRACKET POWERCOATED	EA	
7	B-1614-1	LEG SUPPORT BAR FOR SCI (SET) 9'	EA	
7	B-1614-2	LEG SUPPORT BAR FOR SCI (SET) 15'	EA	
7	B-1614-4	ALUMINUM ANGLE LEG SUPPORT BRACKET	EA	
8	A-1274	INCLINED FEET	EA	
10	B-2718-18	WHEEL SHAFT FOR SCI 18"	EA	
11	95779362	10" DIA WHEELS	EA	
18	K5152	K5152 12' POWER CORD	EA	
29	2X569	5/8" COLLAR	EA	
30	B-3720	PLASTIC STRIP BELT GUIDE	EA	
31	C-5581-18	IDLER ROLLER 18"	EA	
31	C-5581-18N	DRIVE ROLLER 18" KNURLED	EA	
32	B-5580-18DR	DRIVE SHAFT 18"	EA	
33	A-6867-18	1" TU SHAFT PUC, BIC, ICB BODINE	EA	
34	B-5881-09	STAND FOR SCI CONVEYOR 9FT	EA	
34	B-5881-15	STAND FOR SCI CONVEYOR 15FT	EA	
35	C-5582	1" TAKEUP BRACKET	EA	
36	C-5582B	ADJ BOLT FOR TAKE UP BRACKET	EA	
37	110056	1/2 HP AC LEESON MOTOR	EA	
38	FB16X1	FIXED BEARING	EA	
39	TU250X1	TAKE-UP BEARING	EA	
40	A-6042	GUARD FOR RIGHT ANGLE DRIVE	EA	
41	SEC50BA	STRAIN RELIEF FOR ELECTRIC CORD	EA	
42	10101G	3/8" SEALTITE HOSE 14" LONG	EA	
43	ST-9038	SEAL TITE FITTINGS 90 DEG	EA	
44	ST-38	APPLETON CONNECTOR STRAIGHT	EA	
45	GB60-1	RIGHT ANGLE GEAR BOX 60:1 RATIO w/REACTION ARM	EA	
46	A-8788	GEAR BOX TORQUE ARM	EA	
47	CR101Y11	SWITCH WITH PILOT LIGHT	EA	
48	FUSE	FUSE	EA	
49	G175202.00	TORQUE REACTION ARM	EA	

NOTES: FOR ROLLER & SHAFT SPECIFY "DRIVE OR TAKEUP"
SEE BELT SHEET FOR BELTS