FX-D4 SERIES DESICCANT DEHUMIDIFIER

Installation, Operation, and Maintenance Manual

Plastic Process Equipment, Inc.
8303 Corporate Park Drive
Macedonia, OH 44056
Phone: (216) 367-7000
Fax: (216) 367-7022
E-Mail: ppe@nls.net

For further information visit us on the web at http://www.ppe.com

GUARANTEE

1. **Guarantee.** PPE guarantees, for a period of (1) one year from the date of shipment from PPE's plant, the Desiccant Rotor Dehumidifier sold by PPE. The terms of this guarantee are:
   (A) The merchandise must have been installed and maintained in accordance with the PPE Installation, Operation and Maintenance (IOM) instructions.
   (B) PPE warrants the machinery to be delivered hereunder against defects in material and workmanship under normal use and service for one year from the date of shipment. PPE's obligation under this warranty is limited to repairing or furnishing without charge, F.O.B. point of origin, a similar part to replace any part which within the warranty period is proven to have been defective at the time it was shipped, provide the purchaser has given PPE immediate notification to obtain an RMA#. PPE shall require the customer to return the defective part, transportation prepaid, to establish the claim. PPE shall not be held liable for damaged or delay caused by defects. No allowance will be made for repairs or alterations without PPE's written consent or approval.
   (C) Items not covered by the above stated warranty include: Dew Point sensor ((1) one-year warranty). The desiccant rotor is warranted for (2) two years.

2. **Disclaimer of Warranties.** Except for the guarantee set out above, PPE MAKES NO WARRANTY OR MERCHANTABILITY, FITNESS FOR A PARTICULAR PURPOSE, OR ANY OTHER WARRANTY, EXPRESS OR IMPLIED, AS TO THE MERCHANDISE SOLD CUSTOMER. Customer acknowledged and represents to PPE that no employee, agent, or representative of PPE has made any warranty or representation regarding the merchandise, except as set out in paragraph 1 above.

3. **Limitation of Remedy.** PPE's sole obligation under its guarantee is to furnish the replacement part of credit memorandum. PPE is NOT obligated to pay the cost of shipping the defective part to and from PPE's plant.

   In no event will PPE be liable to Customer for consequential damages sustained by Customer, whether such damages are caused by the non-delivery of merchandise, the delivery of defective or unordered merchandise, or any other cause.

4. **Technical Advice.** Upon request, PPE will furnish technical advice to Customer regarding the use of PPE's merchandise, understanding that PPE assumes no obligation or liability for such advice or the results obtained therefrom and that such advice if given and accepted at Customer's risk.

If you have any questions, please contact PPE directly for further information.

BA-252-4R
2/6/06

Plastic Process Equipment, Inc.
8303 Corporate Park Drive
Macedonia, OH 44056
Phone: (216) 367-7000
Fax: (216) 367-7022
E-Mail: ppe@nls.net

Table of Contents

1
INTRODUCTION

1-1 FX SERIES DESICCANT DEHUMIDIFIER INTROCUCTION

Congratulations on your purchase of the PPE FX Series Desiccant Dehumidifier from Plastic Process Equipment, Inc. The FX Series Desiccant Dehumidifier offers the finest in resin drying technology, however, this machine can only provide maximum service if properly installed, operated, and maintained.

This manual is provided to familiarize you with the dehumidifier Instructions are provided to install, operate and maintain your dehumidifier. Ultimate satisfaction depends on the quality of installation and a thorough understanding of the equipment. The FX Series Desiccant Dehumidifier is built around tested engineering principles and has passed a thorough inspection for quality of workmanship and function.

There are many models in the FX Series Desiccant Dehumidifier line, some differences may exist between the pictures in this manual and your specific dehumidifier.

1-2 PRINCIPLES OF OPERATION

The function of the FX Series Desiccant Dehumidify is to continuously remove vapor state moisture from an air stream. This is accomplished by using a rotating desiccant media and three separate air streams. Figure 1-1 illustrates the three air streams.

The first air stream passes the moisture laden air from the drying hopper through the desiccant media. After processed air has been exposed to the desiccant media, the air is returned to the drying hopper. As the desiccant media adsorbs moisture from the process stream, it is rotated out of the process stream into the reactivation stream. This second air stream is heated to drive moisture out of the desiccant media, and prepare it for more adsorption. The desiccant media then rotates out of the reactivation air stream into the purge air stream. The purge stream consists of a small portion of the process outlet air that cools the desiccant media. Once cooled, the desiccant media rotates back into the process stream to begin adsorption again. This cycle is done on a continuous basis, providing a constant drying process. The FX Series Desiccant Dehumidifiers are designed with the process and reactivation air streams flowing in opposite directions. This counter flow design maximizes the energy efficiency of the equipment.

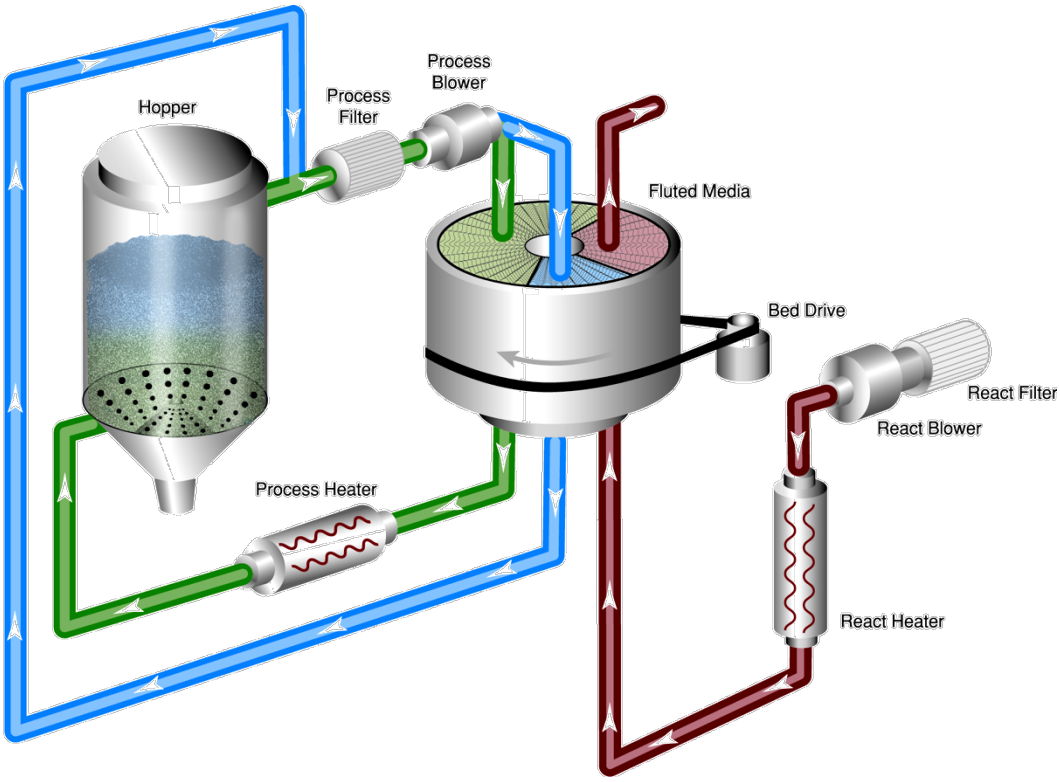

Figure 1-1. Air streams

1-3 FX-D4 SERIES DESICCANT DEHUMIDIFIER SPECIFICATION

MODEL NO.		FX-050	FX-100	FX-180	FX-300	FX-400
Air Flow	CMH	50	100	180	300	400
Dewpoint	°C	-40°	-40°	-40°	-40°	-40°
Drying Blower	KW	0.4	0.75	2.2	3.4	5.5
Drying Heater	KW	4	6	12	15	18
Regen. Blower	KW	0.18	0.18	0.4	0.75	0.75
Regen. Heater	KW	2.5	4	5	8.5	8.5
Processing Heater	Honeycomb Rotor					
Process inlet	inch	2	2.5	2.5	3	3
Process Outlet	inch	2	2.5	2.5	3	3
Cooling Water Flow	Ltr/min	5	15	30	40	50
Water Connect	inch	3/4	1	1	1	1
Power Supply	3Ø，220~460VAC，50/60Hz					
Total Power	KW	7.08	10.93	19.6	27.65	30
DIMENSIONS						
L	mm	770	910	910	1045	1045
W	mm	680	880	880	930	930
H	mm	1280	1630	1630	1930	1930

1-4 FRONT PANEL CONTROLS

The front panel of the FX Series Dehumidifier contains all controls and indicators necessary for dehumidifier operation. For a description of the controls and indications, refer to Figure 1-2 and the following list:

1. Power On indicator – This black switch turned to “on” when power has been supplied to the dehumidifier. This does not indicate that the unit is turned on. This only indicates that power is available to the dehumidifier.
2. System On indicator – This panel screen light illuminates when the Power switch is in the ON position. This indicates that the unit is turned on.
3. Faults indicator – This panel screen showed red light illuminates on “STATUS” when the bed failure alarm occurs, or a failure of motor protection circuit breaker. A bed failure alarm will occur if the desiccant rotor does not rotate at least once every ten minutes.
4. Audible Alarm – The audible alarm will sound to indicate a fault on “STATUS”.
5. Dew point Display – This indicator displays the current process outlet dew point.

NOTE

Dew point Set point is for reference only; dew pointer is strictly display, not control.

6. Process Temperature (Dry temp) – This indicator/controller displays the temperature selected by the Temperature Indication selector, and controls the process outlet temperature. The PV of the display shows the currently selected process variable. The SV of the display shows the process outlet temperature set point. For flexible tubing and water flow requirements see chart below:

Drying Capacities kg/hour

Material	Drying (1) Temp.(˚C/˚F)	Drying Time (hr) (2)	Moisture Content (%)	Drying Capacity / FX-D4 series						
				50	100	180	300	400	700	1000
ABS	80/176	3 - 4	0.4	30	60	100	165	220	390	560
POM	100/212	2	0.3	30	60	105	180	240	420	600
PMMA	80/176	2 - 3	0.4	30	60	105	175	230	405	580
LONOMER	90/194	4 - 5	≦1	20	40	75	120	160	285	405
PA6	75/167	4 - 6	≦1	25	50	90	150	200	345	490
PA6.6	75/167	4 - 6	≦1	25	50	90	150	200	345	490
PA6.10	75/167	4 - 6	≦1	25	50	90	150	200	345	490
PC	120/248	3 - 4	0.3	25	45	75	130	170	295	420
PU	90/194	2 - 3		25	45	75	130	170	295	420
PBT	130/266	3 - 4	0.25	20	35	60	100	135	235	335
PE	90/194	1		20	40	75	120	160	285	405
PET	160/320	4 - 6	0.4	20	35	60	100	135	235	335
PETG	70/158	3 - 4		25	45	8	135	180	310	445
PPO	110/230	2	0.1	25	45	80	135	180	310	445
PP	90/194	1		25	45	80	135	180	310	445
PS(GP)	80/176	1	0.1	30	60	105	180	240	420	600
PSU	120/248	3 - 4	0.2	25	45	80	135	180	310	740
PVC	70/158	1	0.4	40	75	135	225	295	515	740
SAN(AS)	80/176	2	0.1	30	60	105	180	240	420	600

Note: (1) In an independent drying hopper.
(2) Based on relative humidity 65% with ambient temperature of 20˚C/68˚F, moisture content after drying can be 0.005% or less.

7. Regeneration Temperature (Desiccant temp)– This selector controls the temperature displayed on the Temperature Controller. The PV of the display shows the currently selected process variable. The SV of the display shows the process outlet temperature set point. (Default value 180 °C /356 °F)

8. Power switch – This switch controls power to the dehumidifier.

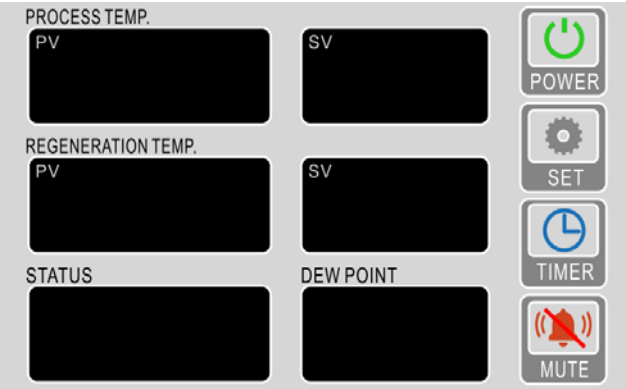

Figure 1-2. Front Panel Controls and Indicators

2
INSTALLATION

2-1 INSPECTION UPON RECEIPT

Thoroughly inspect the dehumidifier to ensure no damage has occurred during shipping. Inspect both the inside and outside of the dehumidifier. If any damage is found, a claim should be filed with the shipping company immediately. Please notify Plastic Process Equipment immediately so we may provide whatever assistance we can.

- Check dehumidifier external surfaces for damage.
- Ensure the desiccant rotor is tightly secured in place.
- Ensure the drive chain is in good contact with the desiccant rotor, tensioner arm, and drive pulley.
- Ensure the top and bottom desiccant rotor seals are in good contact with the desiccant rotor.
- Check all electrical connections to ensure they are tight.

2-2 PLACING THE EQUIPMENT

The dehumidifier should be carefully located and set in place on a level surface. If mounting the dehumidifier on a machine or stand, the dehumidifier must be adequately supported. At a minimum, support is required below the caster mounting plates. Dehumidifier maintenance and service will require access to all sides of the dehumidifier. If the unit is machine or stand mounted, leave enough room on all sides to open all dehumidifier access doors.

2-3 ELECTRICAL CONNECTIONS

⚠CAUTION

Ensure the supply power requirements are in accordance with the dehumidifier nameplate data. Serious damage to the dehumidifier motor and control systems can occur if incorrect power is supplied to the dehumidifier.

Install electrical connections in accordance with all applicable federal, state, and local regulations. Good electrical practices should be followed to achieve the best installation possible. Refer to the electrical schematic provided with this manual before installing any electrical connections. If a disconnect switch is not furnished with your dehumidifier, one should be installed adjacent to the dehumidifier for safety and

ease of servicing. Electrical wiring to the equipment must be adequately sized for the minimum amperage shown on the unit nameplate.

2-4 DUCK WORK CONNECTIONS

NOTE

All supply and return air ductwork and hose connections for the dehumidifier must be air and vapor tight. Failure to achieve air and vapor tight connections may impact dehumidifier performance.

The most common type of ductwork used with resin drying equipment is flexible hose that is both temperature and moisture resistant. Moisture resistance is extremely important for proper dehumidifier performance. Even though the dehumidifier is removing moisture from the hopper return air, the air will not be dry when it reaches the process if moisture enters the dry supply air stream through leaks in the ductwork. Air ducts must be properly sized to keep pressure losses at a minimum. Pressure loss must not exceed the designed static capacity. Connect the process inlet and process outlet hoses to the appropriate connections on the back of the dehumidifier cabinet. Refer to Figure 2-1 for hose connection locations.

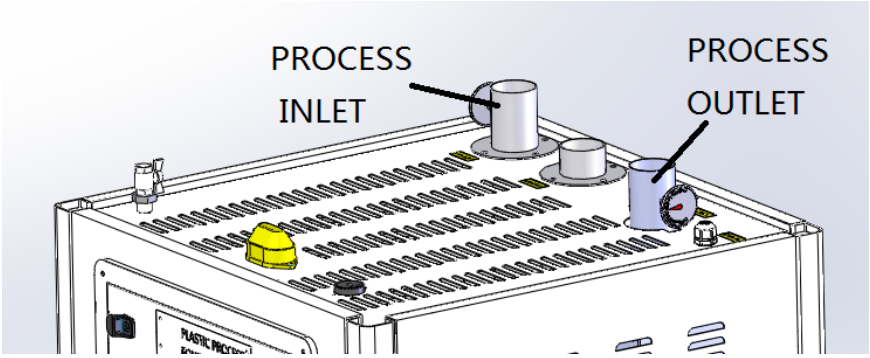

Figure 2-1. Hose Connections

2-5 WATER CONNECTINS

Water should be supplied to the unit to achieve the rated performance. Connections ports for the inlet air-cooling coil are located on the rear of the dehumidifier assembly. When facing the rear of the dehumidifier the connections are located in the lower left hand corner of the rear panel. The connections are male NPT. Water Temperature should be between 40 & 80° F. For flow requirements refer to the table on the following page.

Model	Male NPT connection	Iced water capacity	Iced water flow LPM/GPM
FX-50	1/2"	1500Kcal/H/10°C/50°F	10/2.6
FX-100	1”	3000Kcal/H/10°C/50°F	20/5.2
FX-180	1”	6000Kcal/H/10°C/50°F	30/7.8
FX-300	1”	9000Kcal/H/10°C/50°F	50/13
FX-400	1”	14000Kcal/H/10°C/50°F	60/16
FX-700	1”	27000Kcal/H/10°C/50°F	100/26
FX-1000	1”	42000Kcal/H/10°C/50°F	140/37

Water connections, rear of unit

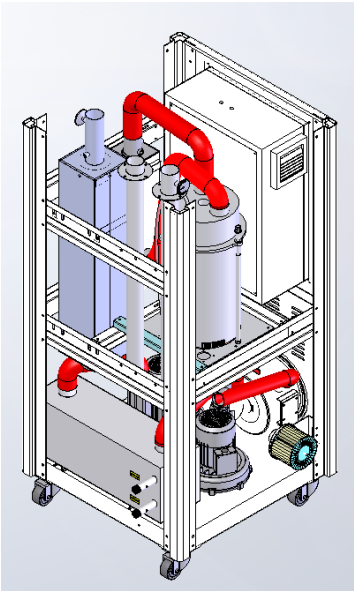

Water lines inside of unit

3
OPERATION

3-1 INITIAL STARTUP

After the dehumidifier has been installed it is ready for initial startup. The following items need to be checked when energizing the dehumidifier for the first time:

- Verify fan rotation direction per paragraph 3-2.
- Set process outlet temperature per paragraph 3-3.
- Set regeneration temperature per paragraph 3-3.

3-2 VERIFYING FAN ROTATION

FX Series Dehumidifiers are powered by 3-phase electrical circuits. With all types of power, it is possible for the process & react fan motor to rotate in the wrong direction. On initial power up of the dehumidifier, FAN ROTATION MUST BE CHECKED TO ENSURE PROPER DEHUMIDIFIER OPERATION.

ON SOME MODELS OF DEHUMIDIFIER, IT MAY BE POSSIBLE TO VIEW THE ROTATION OF THE PROCESS FAN MOTOR. ON THESE MODELS, ENSURE THAT THE MOTOR IS TURNING IN THE DIRECTION INDICATED BY THE ARROW ON THE MOTOR. SEE FIGURE 3-1**.**

Figure 3-1. Process Fan Motor

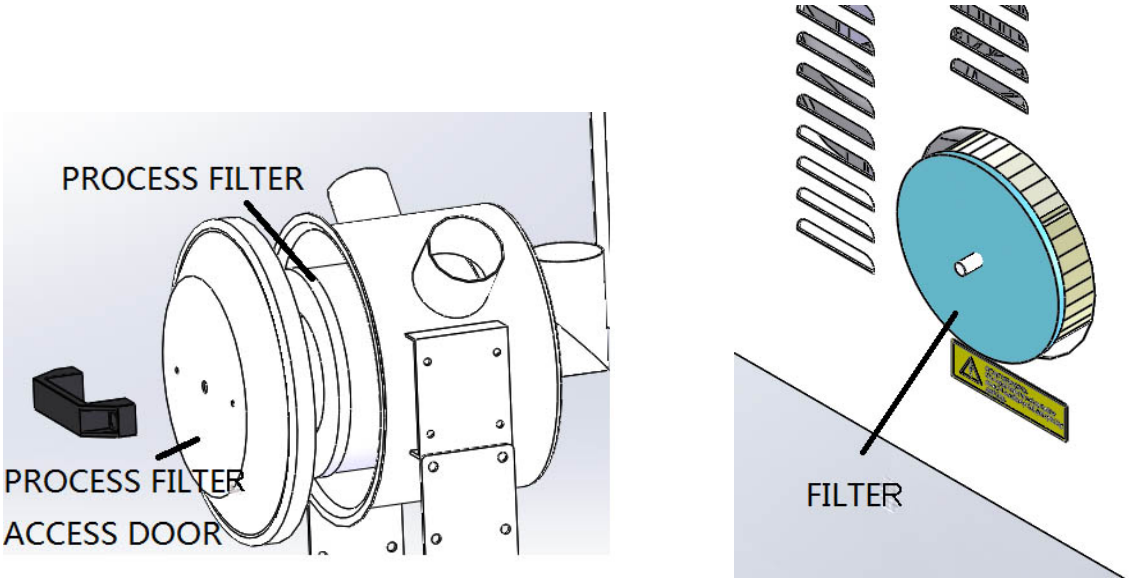

Figure 3-2. Process Filter Access Door

If the process fan motor rotation is not visible, open the process filter access door shown in Figure 3-2. If the process fan is rotating in the proper direction, the dehumidifier should be sucking air in through the filter. If air is blowing out the filter, then the process fan is rotating in the wrong direction.

If the react fan motor rotation is not visible, check that air is blowing out of the react exhaust on the top of the cabinet.

If the fans are turning in the wrong direction, perform the following procedure to fix the rotation direction.

⚠ WARNING

Lock out all power to the dehumidifier before servicing any electrical connections. High voltages are present inside the control cabinet. Failure to lock out power may result in serious injury or death.

1. Turn off the dehumidifier and lock out power at the disconnect switch.
2. Reverse any two of the three main power leads at the electrical disconnect.
3. After making changes to the electrical wiring, verify proper process fan rotation

3-3 SET THE PROCESS OULET TEMPERATURE

The process outlet temperature is set using the Temperature Controller on the front panel, shown in Figure 3-3 and is limited by the thermostat circuit board inside the cabinet. The top PORCESS TEMP of PV is displaying indicates the currently selected temperature for dry air. The middle REGENERATION TEMP is displaying always indicates the desiccant air. (Default value 180 °C /356 °F)

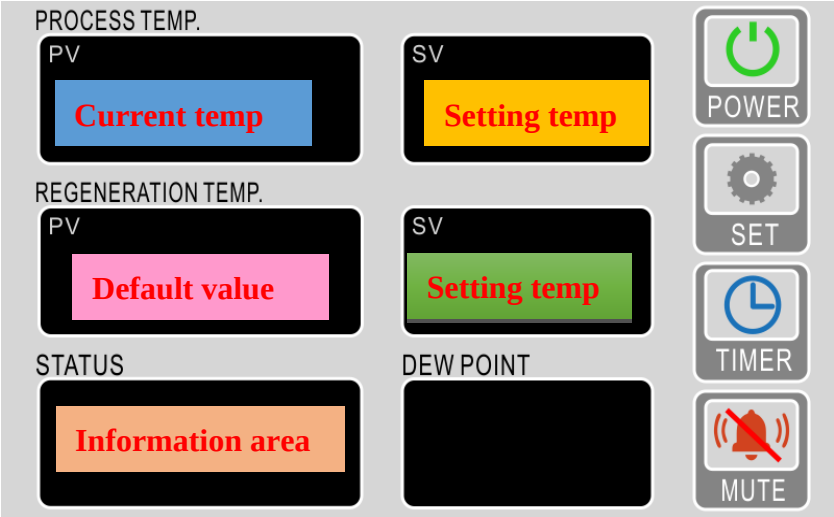

Figure 3-3. Temperature Controller

3-4 REGENERATION TEMPERATURE

The regeneration temperature is controlled by a thermostat circuit board, inside the cabinet. It is factory preset and should not be adjusted. (Default value 180 °C /356 °F) Contact Plastic Process Equipment, Inc. if there are issues with this setting.

3-5 DESICCANT ROTOR ROTATION

The desiccant rotor turns at a speed of approximately 100. The default value is 40 for FX- 50 to 300, and 50 for FX-400-1000. If the desiccant rotor does not complete a minimum of one revolution every 10 minutes, the Faults alarm will activate. This alarm illuminates the red Faults light on the control panel and sounds an audible alarm.

Figure 3-4. Adjusting gadget for desiccant rotor speed

3-6 THERMAL PROBE

The thermal probe can be connected with hopper dryer. For more information on the thermal probe, refer to the manufacture's documentation included with your hopper dryer.

Figure 3-5. Thermal probe for connecting hopper dryer

3-7 HMI+PCB SETUP AND OPERATION

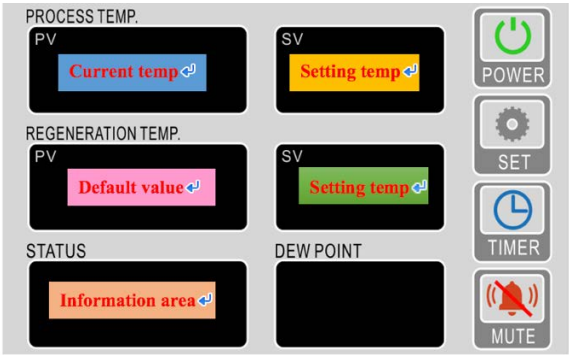

1. Display area (℃)

Name	Description	Remarks
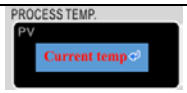	Display dry temp	[100], meaning the reality value is 100
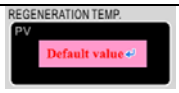	Display regeneration temp	[180], meaning the reality value is 180

2. Start key area

Name	Description	Remarks
POWER	Power on/off	Green color for on, red color for off
SET	Setting parameter	Access code for entry
TIMER	Timer for on	Blue color for on, red color for off
MUTE	Mute function	

3. Setting temperature area

Press SET, show digital keyboard

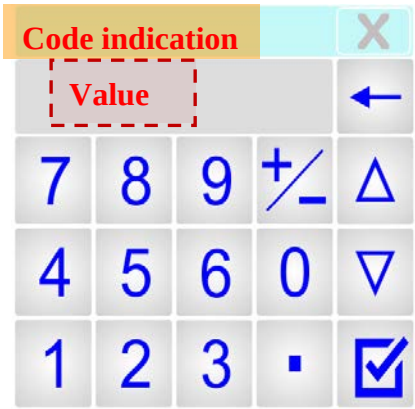

Item	Name	Description
←	Delete	For fault enter
X	Leave	Back to home page
△	Up	Value going up
▽	Down	Value going down
☑	Enter	After setting parameter
+/-	Positive/Negative	Value needs to adjust negative

4. Operation

- Power switch on

Display area on status will show standby.

- Press POWER, fan motor, desiccant rotor entry running position.
- Short after heater start running.
- Press TIMER,timer start, entry value.

- In the alarm state, press MUTE, release audible alarm.
- Press SET for setting parameter, need access code.

5. Setting parameter

In any states, press SET, show entry keyboard, input"**22222**",then press ☑, can be accessed

6. Buttons description

Name	Function description		Parameter value		unit
			Default	Range	
ENG	Management only				
TIMER	TIMER	Timer	OFF	ON~OFF	minute
	MODE	Timing mode	Week	Week/Date	
	DATA	Year	0	0~99	
		Date	0	0~1231	
		Week	1	1~7	
		Clock Calibration	00:00	00:00~23:59	
	Auto On / Off Setting	Monday On	06:01	00:00~23:59	
		Monday Off	17:01	00:00~23:59	
		Tuesday On	06:02	00:00~23:59	
		Tuesday Off	17:02	00:00~23:59	
		Wednesday On	06:03	00:00~23:59	
		Wednesday Off	17:03	00:00~23:59	
		Thursday On	06:04	00:00~23:59	
		Thursday Off	17:04	00:00~23:59	
		Friday On	06:05	00:00~23:59	
		Friday Off	17:05	00:00~23:59	
		Saturday On	06:06	00:00~23:59	
		Saturday Off	17:06	00:00~23:59	
		Sunday On	00:00	00:00~23:59	

		Sunday Off	00:00	00:00~23:59	
		0:00~23:00 ON OR OFF	ON	ON~OFF	
LANGUAGE	Language selected		0	0: English 1: Chinese	
TEMP PAR	Process temp high alarm	PV>SV+[high value]	27	0~350	
	Regeneration temp high alarm	PV>SV+[high value]	27	0~350	
	Temperature low alarm	PV<SV-[low value]	90	0~350	
AT	Press 2 seconds, start PID				
I/O BROWSE	Display input state				
HOME	Back to home page				

Press after setting parameter, if want to leave this page, press

TIMER Auto On / Off Setting：

1. The machine will automatically start running at Auto-On setting time, and shut-off automatically at Auto-off setting time. The parameter setting for Timer shows “On” under this mode.

2. User can select any days of week (from Monday to Sunday) for Auto-On/off timer.

3. User can select any time from twenty-four hour clock for Auto-on/off timer, so the machine will automatically turn on/off at the exact moment by setting.

For example:

July 5, 2022 Auto-On time 10:20 Monday Auto-Off time 22:30 Tuesday

Step 1：

Press（TIMER），and （日期/DATA）to stat the number keyboard，input Year 22 and press（），Date 1205 and press（），press Tuesday（）to reserve，input the Clock Calibration (current time) and press（）to reserve，and then press （）。

Step 2：Press 时间/TIME to start the number keyboard，press（）to find Monday，and input 10.20to set time，and press（）to reserve，（(the way of power off is the same），and press（）。

4. When Timer closed, the parameter setting shows “OFF” on display.

5. Circuit board has a Low Power Saving function that allows machine to save power under normal operation. Once power cut happens, it will release saving power as emergent use for Timer, power enough for 3 days’ time.

Press ENG, and input security code ”**55555**”, press entry page below

Name	Press times	Function description	Parameter value		Unit
			Default	Range	
M/C PAR	0	CH1 setpoint limit（dry）	302℉	℃：0～350 ℉：0～650	℃/℉
	1	CH2 setpoint limit（regenerate）	392℉	℃：0～350 ℉：0～650	℃/℉
	2	CH1 max input（dry）	392℉	℃：5～350 ℉：5～665	℃/℉
	3	CH2 max. Input（regenerate）	482℉	℃：5～350 ℉：5～665	℃/℉
	4	Heater delay	30	0～9999	sec
	5	Motor shutdown delay	300	0～9999	sec
	6	Motor shutdown method	0	0: stop as time 1: stop as temp.	℃/℉/sec
	7	Energy shortage time	9999	0～9999	sec
	8	Disable 3phase detect	ON	0: OFF 1: ON	
	9	Unit	1	0：Celsius 1：Fahrenheit	℃/℉

	10	HEAT	3	1～3	
	11	Roller time	600	0～9999	sec
	12	Digit filter	100	1～250	
	13	DSP SMOOTH	ON	ON~OFF	
	14	IN REVERSE	0	0～1	
	15	TRIP DELAY	10	0～999	
	16	DEWPOINT AIARM	0	-99～100	℃/℉
COMM	1	COM ADDR	1	0-250	
	2	COM BPS	2	0-3	bps
	3	COM INTERV.	0	0-100	ms
	4	EEP	ON	ON: save OFF: no save	
PID	1	CH1 P BAND	20.0	0~999.9	
	2	CH1 INTGRAL	240	0~9999	
	3	CH1 DERIVATE	60	0~9999	
	4	CH1 C P BAND	1000	0~9999	
	5	CH1 ANTI WIND	100	0~100	
	6	CH2 P BAND	20.0	0~999.9	
	7	CH2 INTGRAL	240	0~9999	
	8	CH2 DERIVATE	60	0~9999	
	9	CH2 C P BAND	1000	0~9999	
	10	CH2 ANTI WIND	100	0~100	
	11	CH1 HEAT CYCLE	20.0	0~360.0	sec
	12	CH2 HEAT CYCLE	20.0	0~360.0	sec
TEMP ADJ	1	CH1 OFFSET	0	-99.0~100.0	

	2	CH1 GAIN	1.050	0~9.999	
	3	CH2 OFFSET	0	-99.0~100.0	
	4	CH2 GAIN	1	0~9.999	
	5	CH3 OFFSET	-80	-999.0~1999.9	
	6	CH3 GAIN	5	-9.000~19.999	
	7	CH3 4ma(2V)	1510	0~8190	
	8	CH3 20ma(10V)	7516	0~8190	

** WARNING: Above parameters are for engineering, please don't use it if not necessary.

4
MAINTENANCE

4-1 DESICCANT ROTOR

The desiccant rotor supplied with the dehumidifier, Figure 4-1, will last indefinitely under ideal conditions. However, by their very nature desiccants make good filters. The life of the desiccant is directly related to the airborne contaminants passed through it. Airborne contaminants, exposure to acidic gases or air streams, and contact with petroleum based airborne particles can reduce the efficiency of the desiccant rotor. Proper filtration and preventing contact with chemicals will significantly improve the life of the desiccant.

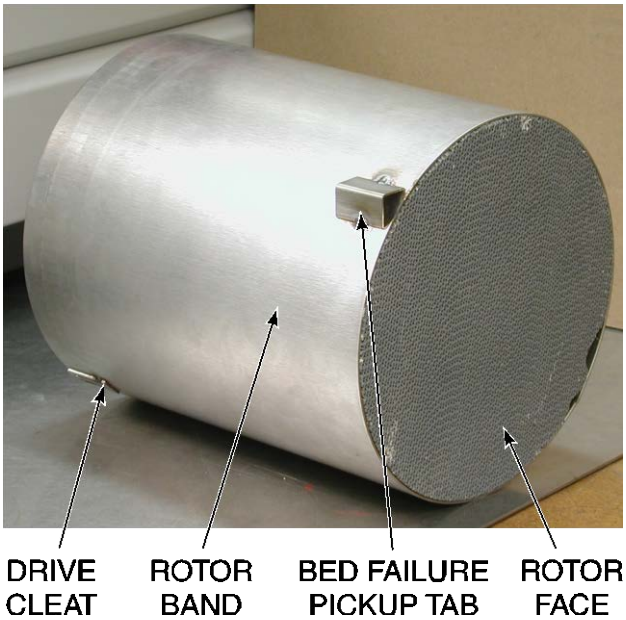

Figure 4-1. Desiccant Rotor

⚠CAUTION

Do not place the desiccant rotor on its face. Serious damage can occur to the desiccant. Damage to the desiccant media may cause improper operation and lack of dehumidifier performance. Always set the desiccant rotor on the metal rotor band. Brace the rotor with blocks to prevent rolling.

The preferred method of cleaning the desiccant rotor is to blow dust out with compressed, oil free, air at a maximum pressure of 20 psig. The desiccant media should then be reactivated by heating at 350ºF maximum for 15 minutes. Washing the desiccant media is not recommended. Wash water impurities may contaminate the desiccant. Inspect the face of the rotor to see that no surface damage has occurred.

4-2 DESICCANT ROTOR SEALS

The top and bottom desiccant rotor seals, Figure 4-2, separate the process, reactivation, and purge air streams. The seals do not normally require service or replacement. Should damage occur, or if poor performance as the result of an air leak is suspected, the seals should be checked and replaced if necessary. Inspect the desiccant rotor seals at the following intervals:

- Upon installation of the dehumidifier
- After 1 week of operation
- After 3 months of operation
- Annually
- Upon loss of performance

To check the desiccant rotor seals, perform the following procedure:

1. Turn off the dehumidifier by placing the power switch in the OFF position.
2. Open both side access doors.
3. Visually inspect for gaps between the desiccant rotor and the desiccant rotor seals. If gaps are noticed, adjust the top and bottom seal plates as required to close the gap. To adjust the seal plates,

loosen the seal plate mounting screws. Press the seal plate lightly toward the desiccant rotor, and tighten the seal plate mounting bolts.

4. If no gaps are noticed, slide a piece of thick paper or a thin piece of cardboard, such as a business card, between the desiccant rotor and the desiccant rotor seal. If the card slides through with no restriction, adjust the top and bottom seal plates as required to close the gap.

5. If no gaps are present and the dehumidifier is still not performing properly, remove the desiccant rotor and check for tears or leaks in the seals. A leak between any of the three air streams can cause a lack of performance. If a tear in a seal is noticed, replace the seal.

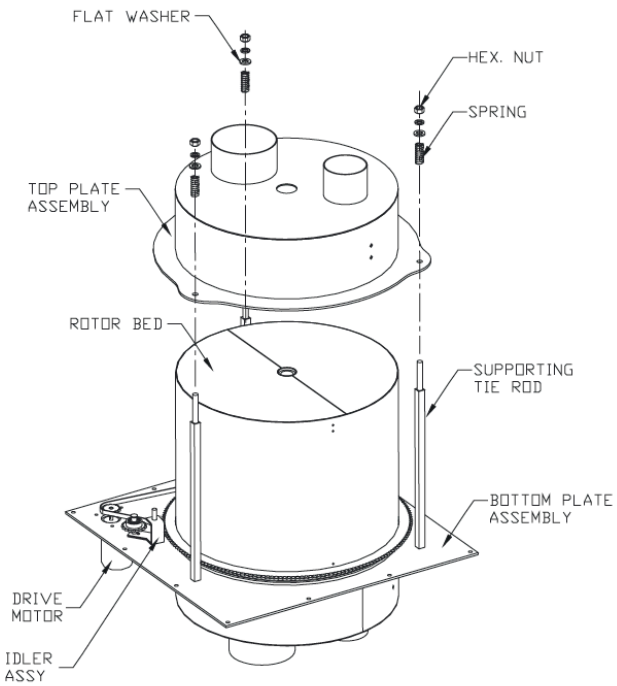

Figure 4-2. Desiccant Rotor Seals

4-3 DESICCANT ROTOR SHELL

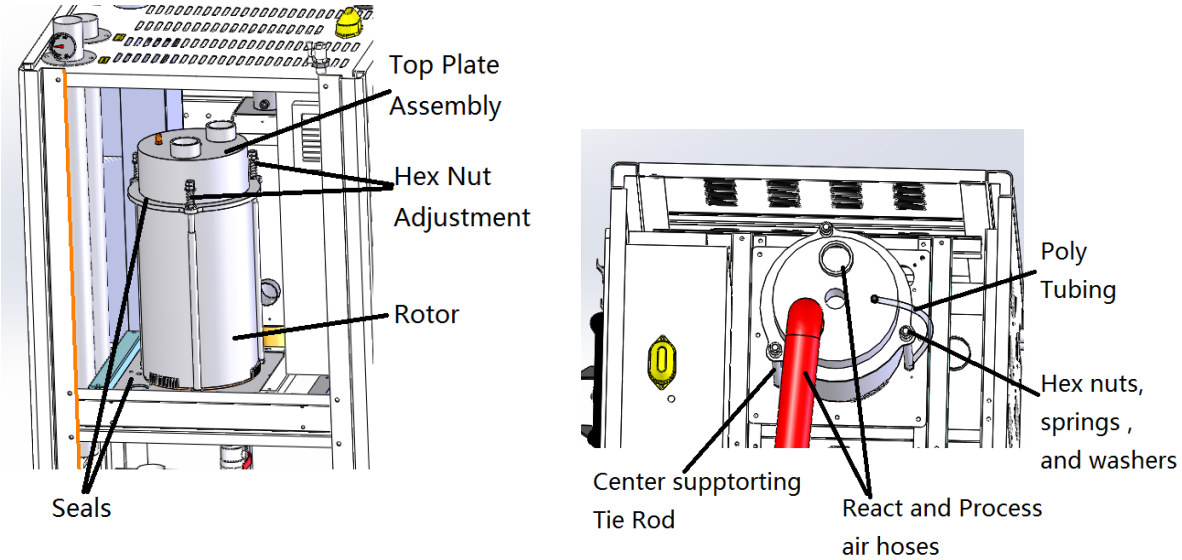

Figure 4-3. Desiccant Rotor Shell

4-4 DESICCANT ROTOR DRIVE MOTOR

The desiccant rotor drive motor is permanently lubricated and requires no maintenance, as shown in Figure 4-4.

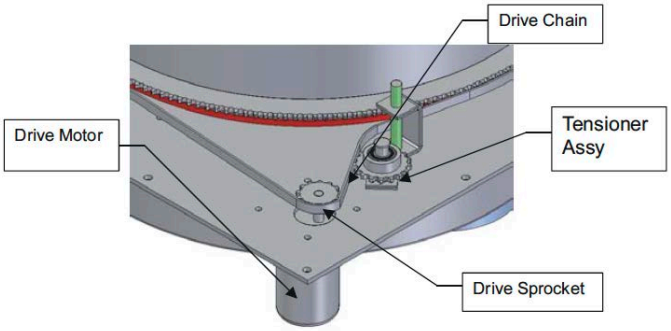

Figure 4-4. Desiccant Rotor Drive Motor

4-5 FILTERS

The FX- Series Resin Dehumidifier include filters for process airflow, regeneration airflow, and two filters on the outside of the control box. The maintenance interval for filters depends on the cleanliness of the air entering the dehumidifier. The filters should be inspected often enough that they do not become clogged. Clogged filters could lead to improper operation of the dehumidifier. Refer to the following paragraphs for replacement procedures for each of the filters.

Process Filter Replacement

1. Turn the dehumidifier off by placing the power switch on the OFF position. Wait for the blowers to stop.
2. Open the process filter access door, shown in Figure 4-5
3. Remove the process filter by removing the wing nut.
4. Install replacement process filter into the dehumidifier. Make sure filter fits over the filter retaining tabs.

   Improper filter installation can lead to reduced performance and shorter life of the desiccant media.
5. Install and tighten the wing nut.
6. Inspect the filter access door seals. Replace the seals if they are dry, brittle, or cracking.
7. Close the process filter access door.

PRPCESS FILTER ACCESS DOOR

WING NUT

Figure 4-5. Process Filter Replacement

Control Box Filter Replacement

1. Turn the dehumidifier off by placing the power switch on the OFF position.
2. Remove the filter guard and filter media, as shown in Figure 4-6.
3. The filter media may be cleaned with soap and water.
4. Install the filter media and the existing filter guard.

Figure 4-6. Control Box Filter Replacement

4-6 MAINTENANCE RECORD FORM

1. Machine Data

Machine model _____ Serial NO. _____ Production date _____

Voltage _____ ¢ _____ V Frequency _____HZ Total Power _____

2. Installation Checklist

( ) Check there is enough space around the machine

( ) Check the connection pipe connected correctly

( ) Check voltage _____ V _____HZ

( ) Fuse size： 1 phase _____ A 3 phase _____ A

3. Checklist

MACHINE NAME: DEHUMIDIFIER		DAILY	WEEK	MONTH	YEAR
ITEM NO.	PORJECT				
1	Set temperature	●			
2	Temperature deviation	●			
3	Pump work w/ or w/o sound		●		
4	Clean filter			●	
5	Electrical current of pump			●	
6	Electrical current of heater			●	
7	Performance control components				●
8	Heating & cooling detection				●

5
TROUBLESHOOTING

5-1 TROUBLESHOOTING INDEX

Troubleshooting procedures are provided in the form. Refer to the following table to determine which figure to refer to for the proper troubleshooting procedure.

TROUBLE SHOOTING	POSSIBLE REASON	EXCLUSION METHOD
E01 DEHUM PROBLE OPEN	1. Drying temperature probe is broken or loose contact. 2. Circuit board is broken.	1. Check or replace the probe. 2. Replace the circuit board.
E01 EREGEN PROBLE OPEN	1. Regen. temperature probe is broken or loose contact. 2. Circuit board is broken.	1. Check or replace the probe. 2. Replace the circuit board.
E02 POWER PHASE FAILURE	1. Incorrect power phase. 2. Out of the power phase. 3. Circuit board is broken.	1. Change the two of phases. 2. Check the power. 3. Replace the circuit board.
E03 DEHUM MOTOR OVERLOAD	1. Drying contactor is broken. 2. Drying overload protection is undervalue or broken. 3. Drying motor is broken.	1. Check the contactor. 2. Check the overload protection (rated current *1.2=setting). 3. Check the motor.
E03 REGEN MOTOR OVERLOAD	1. Regen. contactor is broken. 2. Regen. overload protection is undervalue or broken. 3. Regen. motor is broken.	1. Check the contactor. 2. Check the overload protection (rated current *1.2=setting). 3. Check the motor.
E04 ROLLER FAILURE	1. Proximity switch is broken or incorrect placement. 2. Rotor is out of operation. 3. Belt is broken. 4. Circuit board is broken.	1. Check or replace the proximity switch. 2. Replace SS-22. 3. Replace the belt. 4. Replace the circuit board.
E05 DEHUM OVER TEMP	1. Drying contactor got stuck. 2. Drying filter got stuck. 3. Drying temperature probe loose is contact. 4. Drying motor is broken.	1. Check or replace the contactor. 2. Clean the filter. 3. Check or replace the probe. 4. Check or replace the drying motor.
E05 REGEN OVER TEMP	1. Regen. contactor got stuck. 2. Regen. filter got stuck. 3. Regen. temperature probe loose is contact. 4. Regen. motor is broken.	1. Check or replace the contactor. 2. Clean the filter. 3. Check or replace the probe. 4. Check or replace the regen. Motor.
E06 DEHUM TEMP OVERRHEAT	1. Drying contactor got stuck. 2. Drying filter got stuck. 3. Thermostatic control is broken. 4. Drying motor is broken.	1. Check or replace the contactor. 2. Clean the filter. 3. Check or replace the thermostatic control. 4. Check or replace the drying motor.
E06 REGEN TEMP OVERRHEAT	1. Regen. contactor got stuck. 2. Regen. filter got stuck. 3. Regen. thermostatic control is broken. 4. Regen. motor is broken.	1. Check or replace the contactor. 2. Clean the filter. 3. Check or replace the thermostatic control. 4. Replace or replace the regen. Motor.
E07 DEHUM TEMP HIGH	1. Drying contactor got stuck. 2. Drying filter got stuck. 3. Drying motor is broken.	1. Check or replace the contactor. 2. Clean the filter. 3. Replace or replace the drying Motor.
E07 DEHUM TEMP LOW	1. Drying contactor is loose contact. 2. Drying heater is broken. 3. Circuit board is broken. 4. Drying temperature probe is broken.	1. Check or replace the contactor. 2. Check or replace the heater. 3. Check or replace the circuit board 4. Check or replace the probe.

TROUBLE SHOOTING	POSSIBLE REASON	EXCLUSION METHOD
E07 REGEN TEMP HIGH	1. Regen. contactor got stuck. 2. Regen. filter got stuck. 3. Regen. motor is broken.	1. Check or replace the contactor. 2. Clean the filter. 3. Check or replace the regen. motor.
E07 REGEN TEMP LOW	1. Regen. contactor is loose contact. 2. Regen. heater is broken. 3. Circuit board is broken. 4. Regen. temperature probe is broken.	1. Check or replace the contactor. 2. Check or replace the heater. 3. Check or replace the circuit board 4. Check or replace the probe.
E10 DEHUM PROBLE REVERSE	1. Drying temperature probe is broken or incorrect wiring. 2. Circuit board is broken.	1. Check or replace the probe. 2. Replace the circuit board.
E10 REGEN PROBLE REVERSE	1. Regen. temperature probe is broken or incorrect wiring. 2. Circuit board is broken.	1. Check or replace the probe. 2. Replace the circuit board.
E12 DEHUM EMERGY SHORTAGE	1. Drying contactor is loose contact. 2. Drying heater is broken. 3. Circuit board is broken. 4. Drying temperature probe is broken.	1. Check or replace the contactor. 2. Check or replace the heater. 3. Check or replace the circuit board 4. Check or replace the probe.
E12 REGEN EMERGY SHORTAGE	1. Regen. contactor is loose contact. 2. Regen. heater is broken. 3. Circuit board is broken. 4. Regen. temperature probe is broken.	1. Check or replace the contactor. 2. Check or replace the heater. 3. Check or replace the circuit board 4. Check or replace the probe.
E15 DEHUM TUNNING FAILURE	1. Drying contactor is loose contact. 2. Drying heater is broken. 3. Circuit board is broken. 4. Drying temperature probe loose is broken.	1. Check or replace the contactor. 2. Check or replace the heater. 3. Check or replace the circuit board. 4. Check or replace the probe.
E15 REGEN TUNNING FAILURE	1. Regen. contactor is loose contact. 2. Regen. heater is broken. 3. Circuit board is broken. 4. Regen. temperature probe is broken.	1. Check or replace the contactor. 2. Check or replace the heater. 3. Check or replace the circuit board. 4. Check or replace the probe.
E41 DEWPOINT ALARM (Remark: The stetting value of dew point is greater than the value" 0" of Alarm E41)	1. Regen. filter got stuck. 2. Rotor is leaking air. 3. Circuit board is broken. 4. Dew point meter probe is broken.	1. Clean the filter. 2. Check the rotor. 3. Replace the circuit board. 4. Replace the probe.
E42 POWER FAILURE	1. Out of power during the operation. 2. Abnormal power failure.	1. Press 2 sec. mute button to lift the alarm. 2. Press the power off button and switch off the main power after cooling.
DEWPOINT DISPLAY-----	1. Dew point meter probe is broken or contact failure. 2. Circuit board is broken.	1. Tighten the connecting of dew point, or replace the Dew point meter probe. 2. Check or replace the circuit board.

Figure 5-1. Troubleshooting Index

6
TECHNICAL INFORMATION

6-1 WIRING, MODEL: FX-50/100/180 (230V/3¢/60HZ)

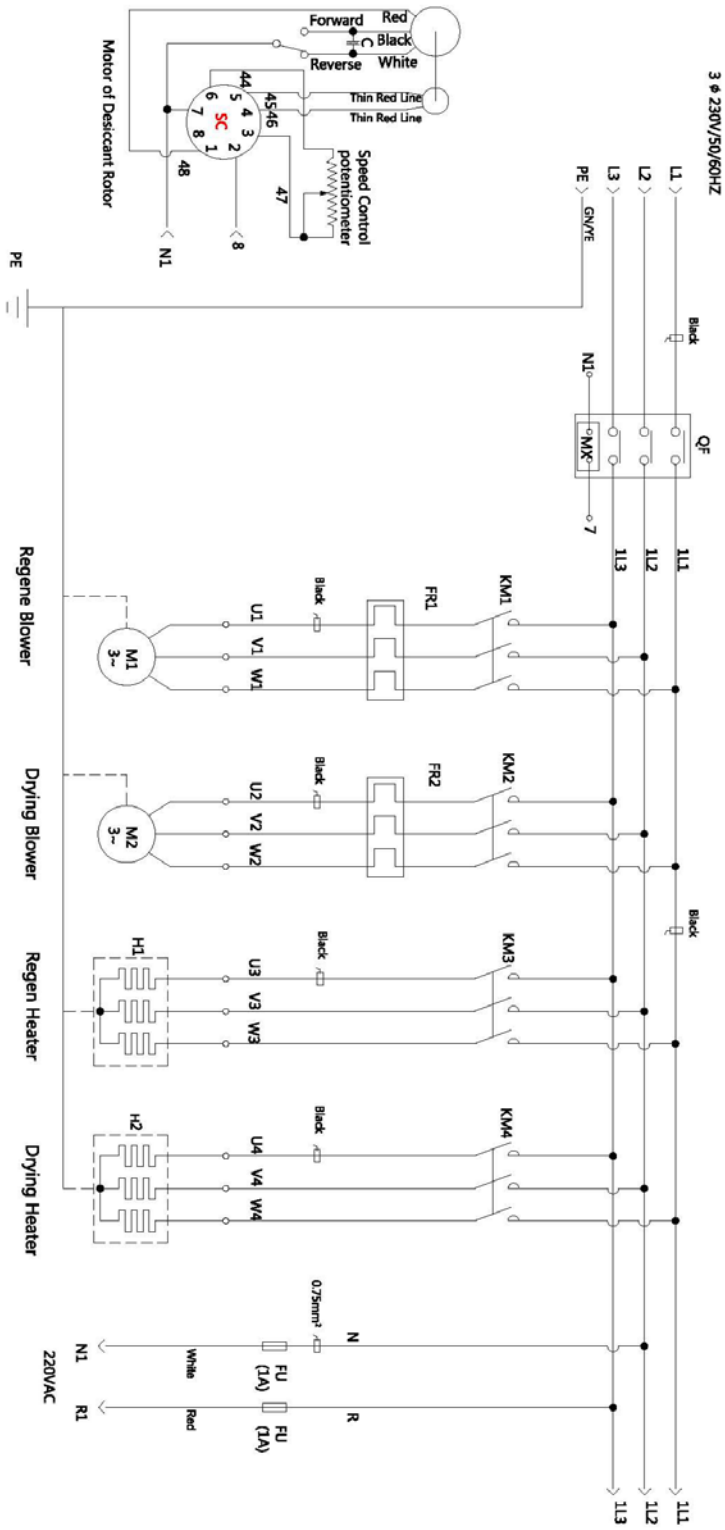

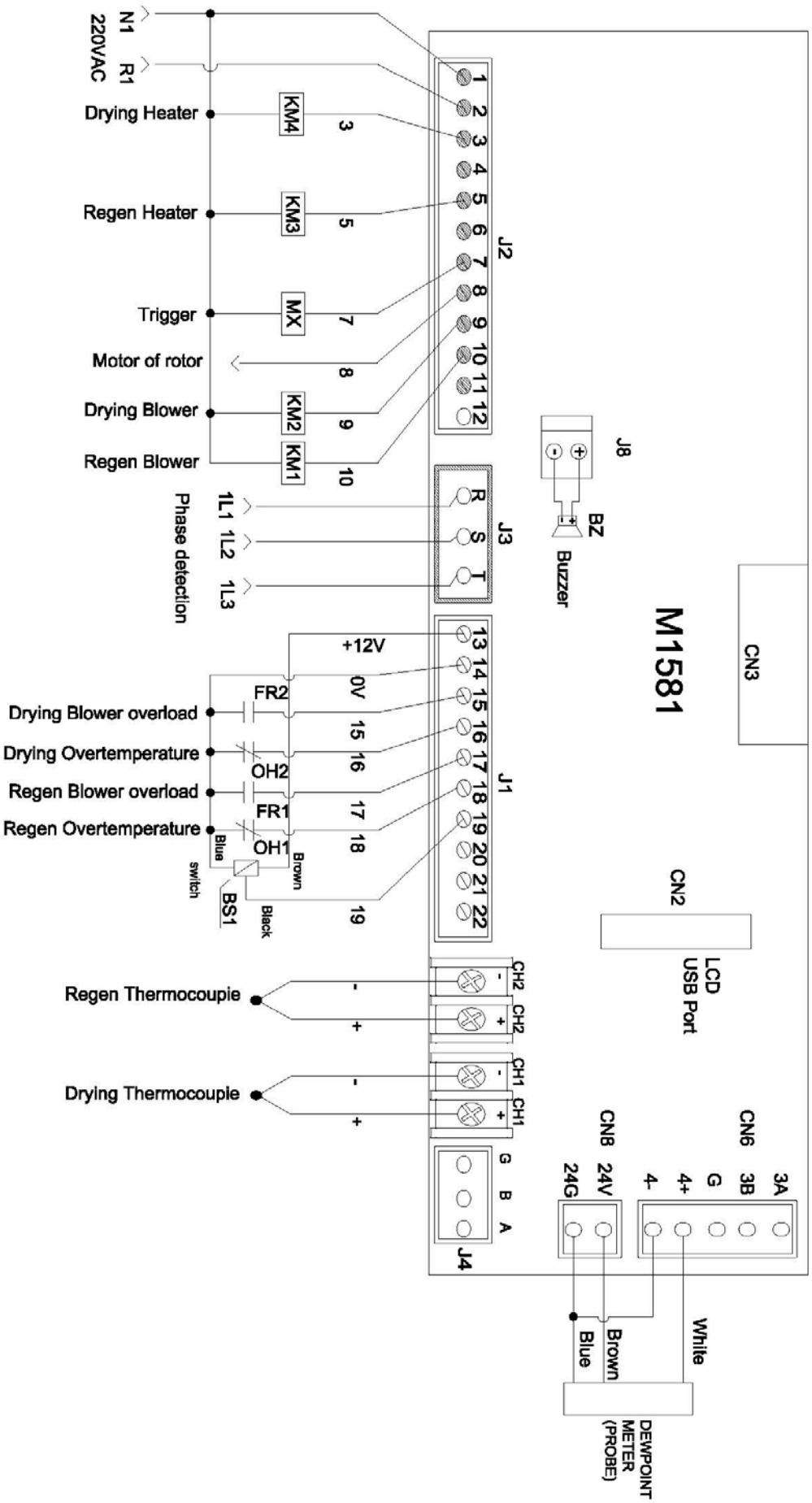
M1581
CN3
CN2
LCD
USB Port
J8
BZ
Buzzer
J2
J3
J1
J4
CN6
CN8
3A
3B
G
4+
4-
24V
24G
Brown
Blue
White
DEWPOINT
METER
(PROBE)
N1
R1
220VAC
Drying Heater
Regen Heater
Trigger
Motor of rotor
Drying Blower
Regen Blower
KM4
KM3
MX
KM2
KM1
Phase detection
1L1
1L2
1L3
+12V
0V
FR2
FR1
OH2
OH1
Drying Blower overload
Drying Overtemperature
Regen Blower overload
Regen Overtemperature
Blue
Brown
Black
switch
BS1
Regen Thermocouple
Drying Thermocouple
CH2
CH1

FX-050230

Code	Description of Goods	Q'ty
QF	No-fuse breaker BO-100EB 50A (w/trigging function)	1 PC
MX	Trigger	
KM1	Regen. blower contactor SC-E02PM-C Coil 220V	1 PC
KM2	Drying blower contactor SC-E02PM-C Coil 220V	1 PC
KM3	Regen. heater contactor SC-E05PM-C Coil 220V	1 PC
KM4	Drying heater contactor SC-E1PM-C Coil 220V	1 PC
FR1	Regen. blower overload protection TK-E02-C (0.95~1.45)	1 PC
FR2	Drying blower overload protection TK-E02-C (2.8~4.2)	1 PC
M1	Regen. blower HB-129 0.18KW	1 PC
M2	Drying blower HB-229 0.4KW	1 PC
H1	Regen. heater 2.5KW/230V	1 PC
H2	Drying heater 4KW/230V	1 PC
SC	Speed regulator TWT SS-22	1 PC
FU	Fuse base w/1A fuse	1 PC
BZ	Buzzer PK-27A29EPQ (DC24V)	1 PC
BS1	Switch (detect rotor) TL-0.5MC1	1 PC
CH1+	Drying thermocouple+	1 PC
CH1-	Drying thermocouple-	1 PC
CH2+	Regen. thermocouple+	1 PC
CH2-	Regen. thermocouple-	1 PC
M1581	I/O board 230V~480V	1 PC

FX-100230

Code	Description of Goods	Q'ty
QF	No-fuse breaker BO-100EB 50A (w/trigging function)	1 PC
MX	Trigger	
KM1	Regen. blower contactor SC-E02PM-C Coil 220V	1 PC
KM2	Drying blower contactor SC-E02PM-C Coil 220V	1 PC
KM3	Regen. heater contactor SC-E1PM-C Coil 220V	1 PC
KM4	Drying heater contactor SC-E2PM-C Coil 220V	1 PC
FR1	Regen. blower overload protection TK-E02-C (0.95~1.45)	1 PC
FR2	Drying blower overload protection TK-E02-C (4~6)	1 PC
M1	Regen. blower HB-129 0.18KW	1 PC
M2	Drying blower HB-329 0.75KW	1 PC
H1	Regen. heater 4KW/230V	1 PC
H2	Drying heater 6KW/230V	1 PC
SC	Speed regulator TWT SS-22	1 PC
FU	Fuse base w/1A fuse	1 PC

BZ	Buzzer PK-27A29EPQ (DC24V)	1 PC
BS1	Switch (detect rotor) TL-0.5MC1	1 PC
CH1+	Drying thermocouple+	1 PC
CH1-	Drying thermocouple-	1 PC
CH2+	Regen. thermocouple+	1 PC
CH2-	Regen. thermocouple-	1 PC
M1581	I/O board 230V~480V	1 PC

FX-180230

Code	Description of Goods	Q'ty
QF	No-fuse breaker BO-100EB 100A (w/trigging function)	1 PC
MX	Trigger	
KM1	Regen. blower contactor SC-E02PM-C Coil 220V	1 PC
KM2	Drying blower contactor SC-E04PM-C Coil 220V	1 PC
KM3	Regen. heater contactor SC-E2PM-C Coil 220V	1 PC
KM4	Drying heater contactor SC-E3PM-C Coil 220V	1 PC
FR1	Regen. blower overload protection TK-E02-C (2.8~4.2)	1 PC
FR2	Drying blower overload protection TK-E02-C (9~13)	1 PC
M1	Regen. blower HB-229 0.4KW	1 PC
M2	Drying blower HB-529 2.2KW	1 PC
H1	Regen. heater 5KW/230V	1 PC
H2	Drying heater 12KW/230V	1 PC
SC	Speed regulator TWT SS-22	1 PC
FU	Fuse base w/1A fuse	1 PC
BZ	Buzzer PK-27A29EPQ (DC24V)	1 PC
BS1	Switch (detect rotor) TL-0.5MC1	1 PC
CH1+	Drying thermocouple+	1 PC
CH1-	Drying thermocouple-	1 PC
CH2+	Regen. thermocouple+	1 PC
CH2-	Regen. thermocouple-	1 PC
M1581	I/O board 230V~480V	1 PC

6-2 WIRING, MODEL: FX-100/180/300/400 (460V/3¢/60HZ)

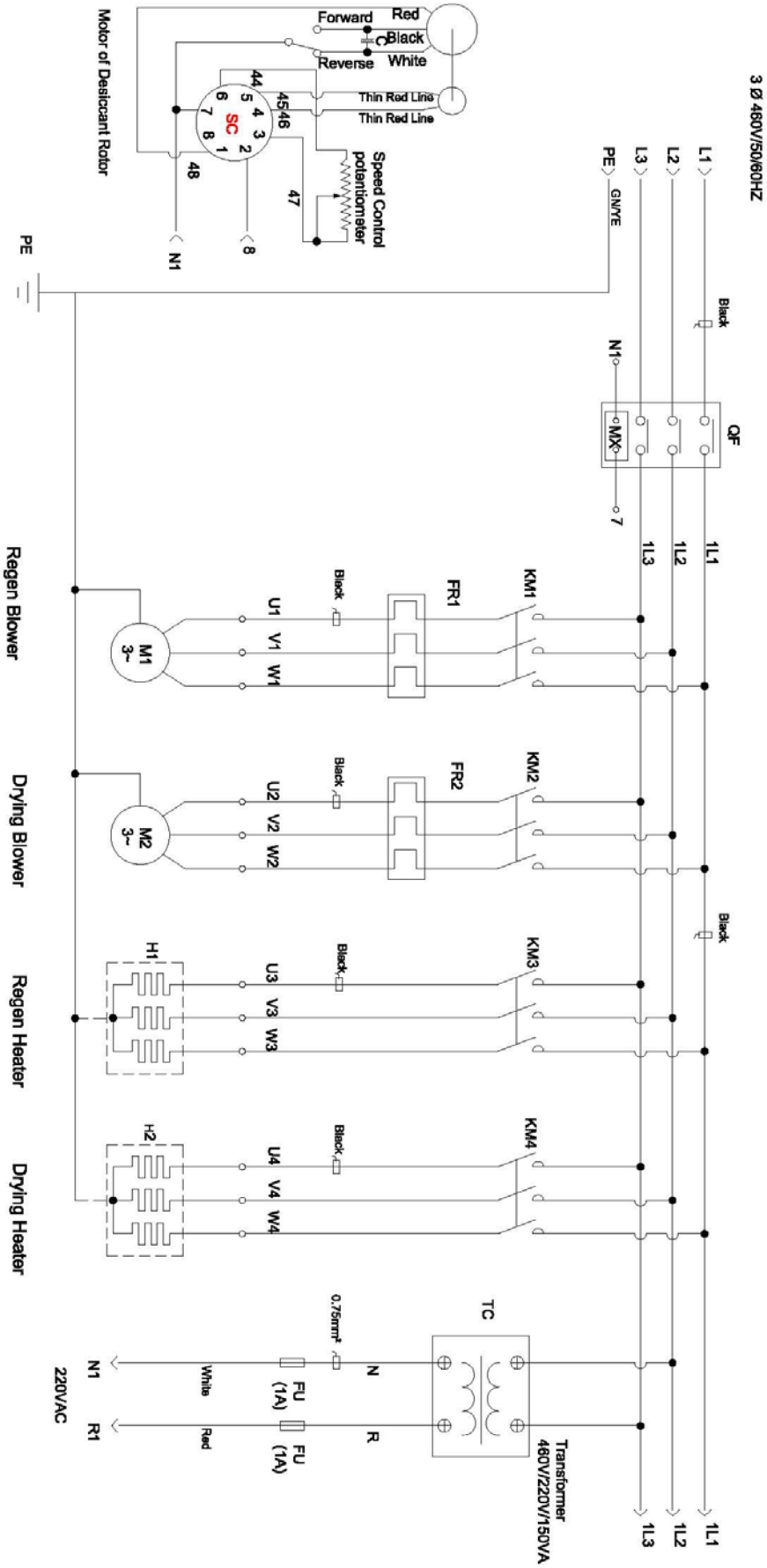

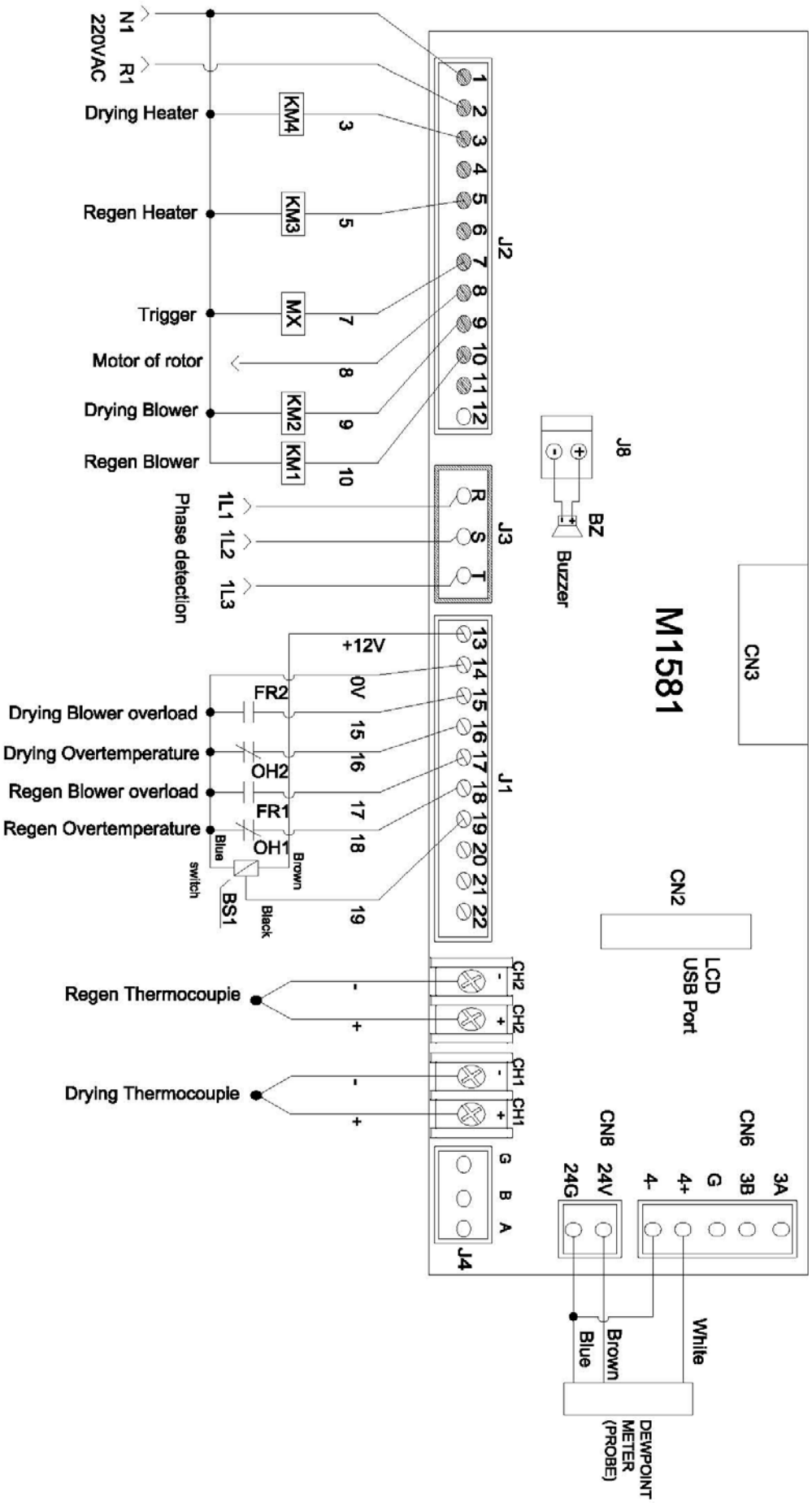
M1581
CN3
CN2
LCD
USB Port
J1
J2
J3
J4
J8
BZ
Buzzer
CN6
3A
3B
G
4+
4-
CN8
24V
24G
Drying Heater
Regen Heater
Trigger
Motor of rotor
Drying Blower
Regen Blower
KM4
KM3
MX
KM2
KM1
Phase detection
1L1
1L2
1L3
+12V
0V
FR2
OH2
FR1
OH1
Drying Blower overload
Drying Overtemperature
Regen Blower overload
Regen Overtemperature
Blue
Brown
Black
switch
BS1
Regen Thermocouple
Drying Thermocouple
CH2
CH1
G
B
A
N1
R1
220VAC
Blue
Brown
White
DEWPOINT
METER
(PROBE)

FX-100460

Code	Description of Goods	Q'ty
QF	No-fuse breaker BO-100EB 50A (w/trigging function)	1 PC
MX	Trigger	
KM1	Regen. blower contactor SC-E02PM-C Coil 220V	1 PC
KM2	Drying blower contactor SC-E02PM-C Coil 220V	1 PC
KM3	Regen. heater contactor SC-E04PM-C Coil 220V	1 PC
KM4	Drying heater contactor SC-E05PM-C Coil 220V	1 PC
FR1	Regen. blower overload protection TK-E02-C (0.64~0.96)	1 PC
FR2	Drying blower overload protection TK-E02-C (2.8~4.2)	1 PC
M1	Regen. blower HB-129 0.18KW/460V	1 PC
M2	Drying blower HB-329 0.75KW/460V	1 PC
H1	Regen. heater 4KW/460V	1 PC
H2	Drying heater 6KW/460V	1 PC
TC	Transformer 460V to 220V/150VA	1 PC
SC	Speed regulator TWT SS-22	1 PC
FU	Fuse base w/1A fuse	1 PC
BZ	Buzzer PK-27A29EPQ(DC24V)	1 PC
BS1	Switch (detect rotor) TL-0.5MC1	1 PC
CH1+	Drying thermocouple+	1 PC
CH1-	Drying thermocouple-	1 PC
CH2+	Regen. thermocouple+	1 PC
CH2-	Regen. thermocouple-	1 PC
M1581	I/O board 230V~480V	1 PC

FX-180460

Code	Description of Goods	Q'ty
QF	No-fuse breaker BO-100EB 50A(w/trigging function)	1 PC
MX	Trigger	
KM1	Regen. blower contactor SC-E02PM-C Coil 220V	1 PC
KM2	Drying blower contactor SC-E04PM-C Coil 220V	1 PC
KM3	Regen. heater contactor SC-E05PM-C Coil 220V	1 PC
KM4	Drying heater contactor SC-E2PM-C Coil 220V	1 PC
FR1	Regen. blower overload protection TK-E02-C(1.4~2.2A)	1 PC
FR2	Drying blower overload protection TK-E02-C(5~8A)	1 PC
M1	Regen. blower HB-229 0.4KW/460V	1 PC
M2	Drying blower HB-529 2.2KW/460V	1 PC
H1	Regen. heater 5KW/460V	1 PC
H2	Drying heater 12KW/460V	1 PC

TC	Transformer 460V to 220V/150VA	1 PC
SC	Speed regulator TWT SS-22	1 PC
FU	Fuse base w/1A fuse	1 PC
BZ	Buzzer PK-27A29EPQ (DC24V)	1 PC
BS1	Switch (detect rotor)TL-0.5MC1	1 PC
CH1+	Drying thermocouple+	1 PC
CH1-	Drying thermocouple-	1 PC
CH2+	Regen. thermocouple+	1 PC
CH2-	Regen. thermocouple-	1 PC
M1581	I/O board 230V~480V	1 PC

FX-300460

Code	Description of Goods	Q'ty
QF	No-fuse breaker BO-100EB 100A(w/trigging function)	1 PC
MX	Trigger	
KM1	Regen. blower contactor SC-E02PM-C Coil 220V	1 PC
KM2	Drying blower contactor SC-E04PM-C Coil 220V	1 PC
KM3	Regen. heater contactor SC-E1PM-C Coil 220V	1 PC
KM4	Drying heater contactor SC-E3PM-C Coil 220V	1 PC
FR1	Regen. blower overload protection TK-E02-C(2.8~4.2A)	1 PC
FR2	Drying blower overload protection TK-E02-C(7~11A)	1 PC
M1	Regen. blower HB-329 0.75KW/460V	1 PC
M2	Drying blower HB-629 3.4KW/460V	1 PC
H1	Regen. heater 8.5KW/460V	1 PC
H2	Drying heater 15KW/460V	1 PC
TC	Transformer 460V to 220V/150VA	1 PC
SC	Speed regulator TWT SS-22	1 PC
FU	Fuse base w/1A fuse	1 PC
BZ	Buzzer PK-27A29EPQ (DC24V)	1 PC
BS1	Switch (detect rotor) TL-0.5MC1	1 PC
CH1+	Drying thermocouple+	1 PC
CH1-	Drying thermocouple-	1 PC
CH2+	Regen. thermocouple+	1 PC
CH2-	Regen. thermocouple-	1 PC
M1581	I/O board 230V~480V	1 PC

FX-400460

Code	Description of Goods	Q'ty
QF	No-fuse breaker BO-100EB 100A (w/trigging function)	1 PC
MX	Trigger	
KM1	Regen. blower contactor SC-E02PM-C Coil 220V	1 PC
KM2	Drying blower contactor SC-E05PM-C Coil 220V	1 PC
KM3	Regen. heater contactor SC-E1PM-C Coil 220V	1 PC
KM4	Drying heater contactor SC-E3PM-C Coil 220V	1 PC
FR1	Regen. blower overload protection TK-E02-C(2.8~4.2A)	1 PC
FR2	Drying blower overload protection TK-E02-C(12~18A)	1 PC
M1	Regen. blower HB-329 0.75KW/460V	1 PC
M2	Drying blower HB-729 5.5KW/460V	1 PC
H1	Regen. heater 8.5KW/460V	1 PC
H2	Drying heater 18KW/460V	1 PC
TC	Transformer 460V to 220V/150VA	1 PC
SC	Speed regulator TWT SS-22	1 PC
FU	Fuse base w/1A fuse	1 PC
BZ	Buzzer PK-27A29EPQ (DC24V)	1 PC
BS1	Switch (detect rotor) TL-0.5MC1	1 PC
CH1+	Drying thermocouple+	1 PC
CH1-	Drying thermocouple-	1 PC
CH2+	Regen. thermocouple+	1 PC
CH2-	Regen. thermocouple-	1 PC
M1581	I/O board 230V~480V	1 PC

6-3 EXPLOSION VIEW (FX SERIES)

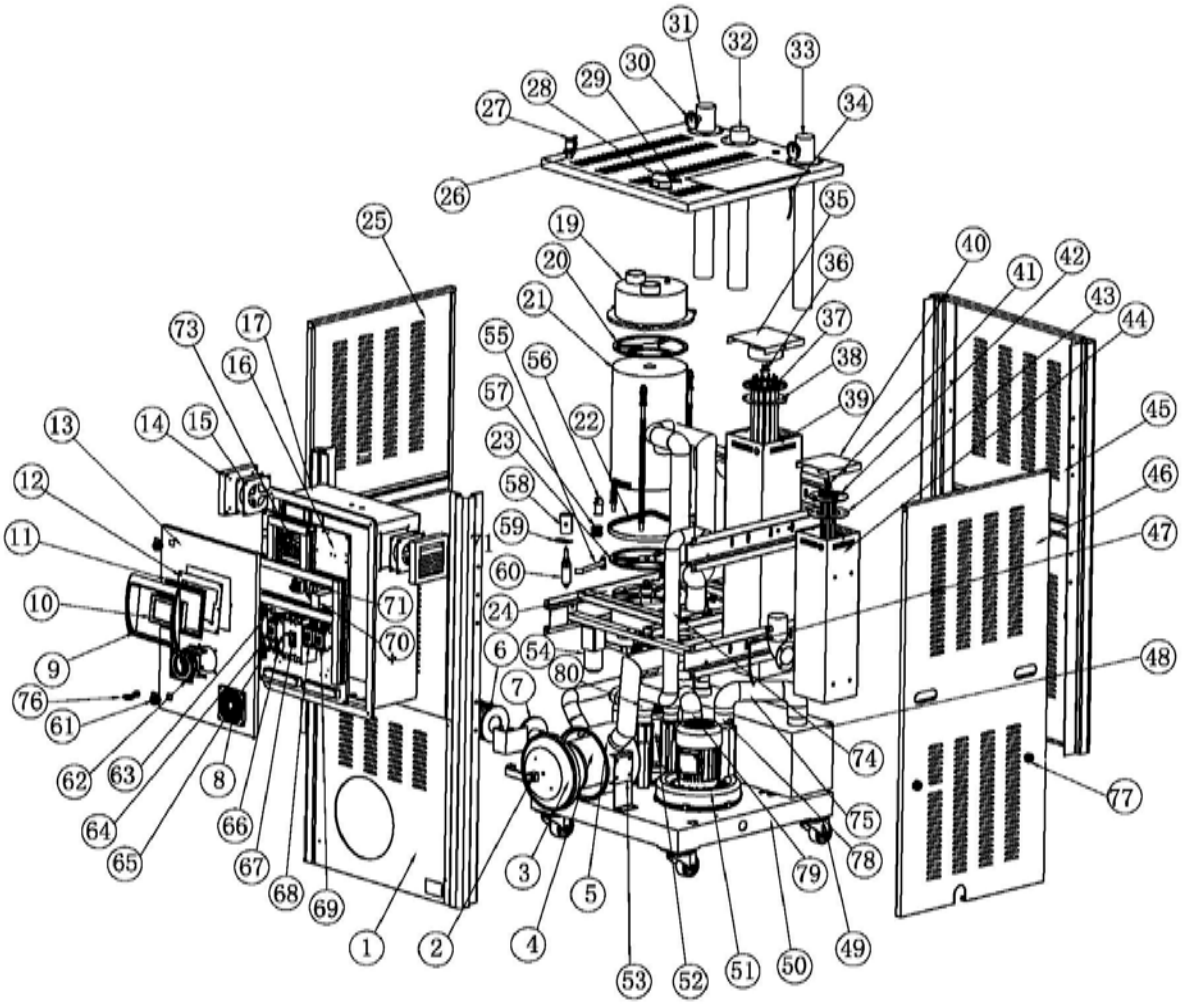

FX-050230			
POS	DESCRIPTION	FORMAX ITEM-NO	QTY
1	**Front cover on bottom**	TM-HCD050-008	1
2	**Handle**	TV-A45-0000000120	1
3	**Filter lid**	TM-HCD180-PH-026X	1
4	**Drying Filter ϕ170*L150)**	TV-A32-0200170150	1
5	**Filter hopper body**	TM-HCD050-024	1
6	**Regen Filter(ϕ120*L100)**	TV-A32-0200122100	1
7	**Air inlet port of regen. blower filter**	TM-HCD180-PH-033	1
8	**Ventilation filter 120*120**	TV-A32-0101120120	1
9	**Plastic frame**	TV-A19-01000010	1
10	**LCD display**	TV-B01-HCD-HMI	1
11	**HMI film**	TM-HCD180-PH-047	1
12	**HMI fixed plate**	TM-HCD180-PH-046	1
13	**Front movable cover on top 1**	TM-HCD180-PH-014	1
14	**Blinds ventilation filter 105*105**	TV-A32-010000105105	1
15	**Cooling fan (AC220V) 120*120**	TV-A28-0012001200	1
16	**Bottom plate of control box**	TM-HCD180-013	1
17	**HCD50 Control box**	TM-HCD050-PH-012	1
19	**Rotor Top Cover ZL50-002**	TM-ZL50-002	1
20	**Rotor Top Gasket ZL50-006**	TM-ZL50-006	1
21	**Honeycomb rotor PP(S+M)R-150*200**	TV-A29-12215020	1
22	**Belt 228XL,W10MM**	TV-A29-10022810	1

23	**Rotor Bottom Cover ZL50-005**	TM-ZL50-005	1
24	**Rotor Bottom Gasket ZL50-001**	TM-ZL50-001	1
25	**Left cover**	TM-HCD050-PH-011	1
26	**Copper nipple 3/8"*3/8"**	TV-A02-10020303	1
27	**SUS Ball valve 3/8"**	TV-A08-00000003	1
28	**Alarm (yellow flashing) N-3051 DC24V**	TV-B12-10N3051024	1
29	**Buzzer PK-27A29EPQ (3~24V /DC)**	TV-B12-00PK27A29EPQ	1
30	**Thermometer (0-200) 1/4"PT L=50**	TV-B07-0010020002	2
31	**1.5” Process inlet tube**	TM-HCD050-030	1
32	**1.5” Regen. outlet tube**	TM-HCD050-032	1
33	**1.5"Process outlet tube**	TM-HCD50-N-015	1
34	**Drying temperature probe (1/8PT*50L*10M)**	TV-A14-00105040	1
35	**Insulation cover of drying heater**	TM-HCD50-N-006	1
36	**Thermostatic control V2-BH-BLSD**	TV-B07-03000000V2	1
37	**Drying Heater 4.0KW AC230V/400V**	TM-FCD-550D5-052-385	1
38	**Drying heater asbestos gasket**	TM-HCD050-PH-040	1
39	**Drying heater**	TM-HCD50-N-007	1
40	**Insulation cover of Regen. heater**	TM-HCD-200-N-005	1
41	**Thermostatic control V2-BH-BLSD**	TV-B07-03000000V2	1
42	**Regen Heater 2.5KW AC230V/400V**	TV-A42-0025000038	1
43	**Regen. heater asbestos gasket**	TM-HCD050-037	1
44	**Regen. heater**	TM-HCD-50-N-12	1
45	**Rear cover**	TM-HCD050-PH-009	1
46	**Right cover**	TM-HCD050-PH-010	1
47	**Regen. temperature probe (1/8PT*50L*4M)**	TV-A14-00105040	1
48	**Cooler HCD50**	TM-HCD050-603	1
49	**3" Caster**	TV-A26-00003100	2
	3" Caster w/brake	TV-A26-00003101	2
50	**Bottom cover**	TM-HCD50-PH-001	1
51	**Blower (DG-200-16) 0.4KW AC200~480V/50/60HZ**	TV-A21-03002293	1
52	**Blower (DG-100-16) 0.18KW AC200~480V/50/60HZ**	TV-A21-03001293	1
53	**Fixed plate of filter**	TM-HCD180-025	2
54	**TWT motor reducer G-2N36-K**	TV-A40-1000TWTG2N36K	1
	TWT motor mid-reducer G-2N10X-K	TV-A40-100TWTG2N10XK	1
	TWT motor M-2IK6N-CV	TV-A40-10TWTM2IK6NCV	1
55	**Snap for rotor**	TV-A29-14000001	1
56	**Proximity switch TL-0.5MC1**	TV-B02-210TL05MC1	1
57	**Synchronous wheel 11MM *20 gears**	TV-A29-13000315	1
58	**Dew point meter aluminum block**	TM-SRD-20190529-001	1
59	**Dew point meter fixed clip LDJ-015**	TM-LDJ-015	1
60	**Dew point meter CDT210**	TV-A29-202CDT210	1
61	**CONTROL BOX DOOR FASTENER MS1000-5) S1B4502 DEPTH:2MM**	TV-A18-001000-5-1	2
62	**Handwheel switch FG-21E U4**	TV-B02-1100FG21E0	1
63	**Contactor SC-E02PM-C 220V**	TV-B03-00000E02PM	1
64	**Relay TK-E02-C(0.95~1.45A)**	TV-B03-01TKE02C-L	1
65	**ContactorSC-E02PM-C 220V**	TV-B03-00000E02PM	1
66	**Relay TK-E02-C(2.8~4.2A)**	TV-B03-01TKE02C-N	1
67	**Breaker BO-100EB 50A**	TV-B02-0B0100EB50	1
68	**Contactor SC-E05PM-C 220V**	TV-B03-00000E05PM	1

69	**Contactor SC-E1PM-C 220V**	TV-B03-00000E1PM0	1
70	**Rotor speed control TWT SS-22 6W**	TV-A40-100TWTSS2225W	1
71	**Fuse base FS-10**	TV-B10-03000FS-10	2
73	**PCB MD1581**	TV-B01-00010M1581-1	1
74	**Orange hose ϕ1.5"**	TV-A30-066000001504-1	4
75	**Orange hose ϕ2"**	TV-A30-066000002004-15	4
76	**Key YS-08**	TV-A18-200YS-08	1
77	**MACHINE BODY DOOR FASTENER MS1000-5(S1B4504) DEPTH:4MM**	TV-A18-001000-5-2	6
78	**DRYER BLOWER INLET TUBE**	TM-HCD050-PH-022	1
79	**DRYER BLOWER OUTLET TUBE**	TM-HCD050-PH-021	1
80	**REGEN BLOWER IN/OUTLET TUBE**	TM-SRD-HCD050-035	2

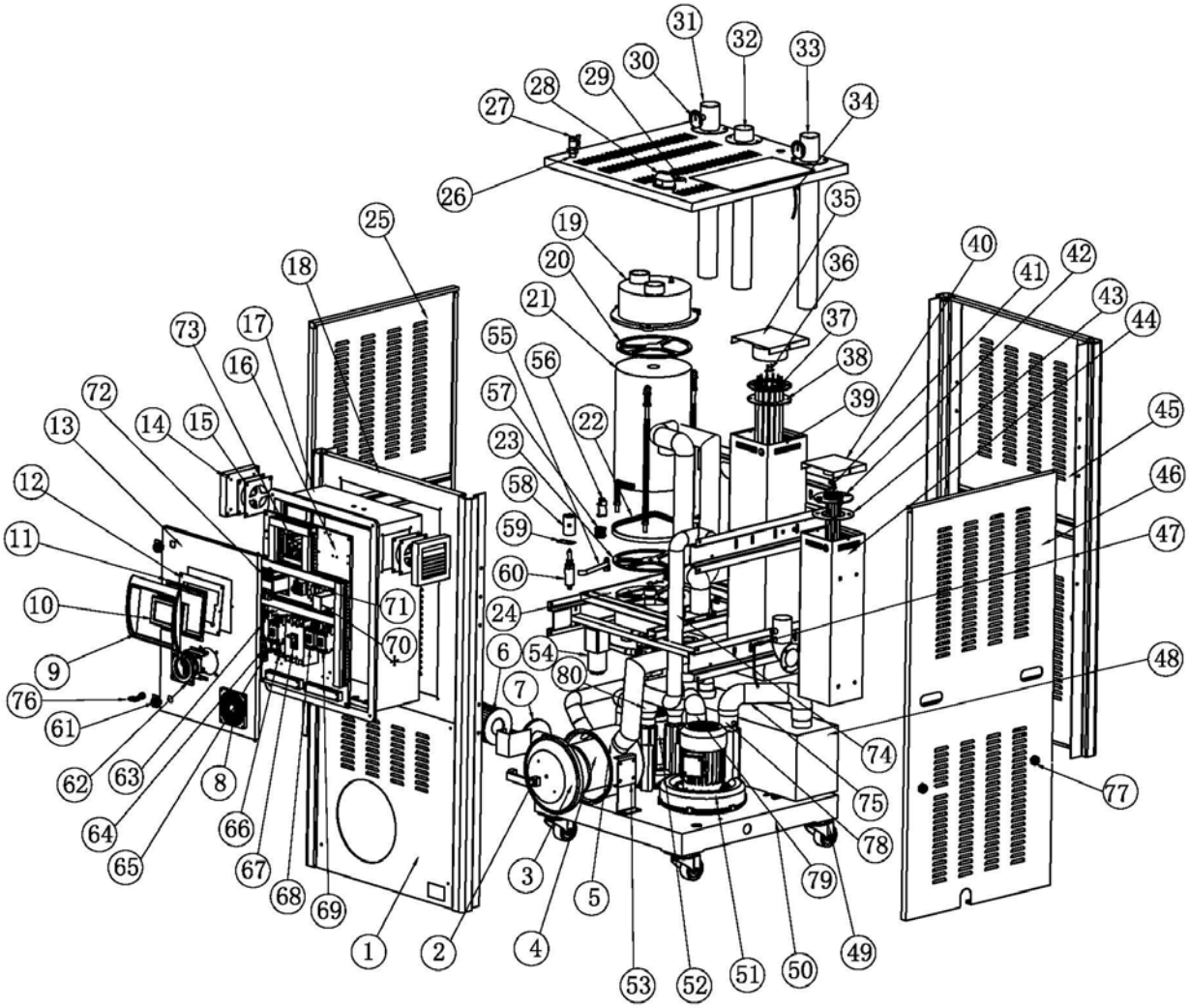

FX-100460				FX-100230	
POS	**DESCRIPTION**	**FORMAX ITEM-NO**	**QTY**	**DESCRIPTION**	**FORMAX ITEM-NO**
1	**Front cover on bottom**	TM-HCD180-PH-008	1		
2	**Handle**	TV-A45-0000000120	1		
3	**Filter lid**	TM-HCD180-PH-026X	1		
4	**Drying Filter ϕ170*L150)**	TV-A32-0200170150	1		

5	**Filter hopper body**	TM-HCD180-024	1		
6	**Regen Filter (ϕ120*L100)**	TV-A32-0200122100	1		
7	**Air inlet port of regen. blower filter**	TM-HCD180-PH-033	1		
8	**Ventilation filter 120*120**	TV-A32-0101120120	1		
9	**Plastic frame**	TV-A19-01000010	1		
10	**LCD display**	TV-B01-HCD-HMI	1		
11	**HMI film**	TM-HCD180-PH-047	1		
12	**HMI fixed plate**	TM-HCD180-PH-046	1		
13	**Front movable cover on top 2**	TM-HCD180-PH-049	1		
14	**Blinds ventilation filter 105*105**	TV-A32-010000105105	1		
15	**Cooling fan (AC220V) 120*120**	TV-A28-0012001200	1		
16	**Bottom plate of control box**	TM-HCD180-013	1		
17	**HCD50 Control box**	TM-HCD180-PH-012	1		
18	**Front cover on top**	TM-HCD180-PH-007X	1		
19	**Rotor Top Cover ZL100-002**	TM-ZL100-002	1		
20	**Rotor Top Gasket ZL100-006-1**	TM-ZL100-006-1	1		
21	**Honeycomb rotor PP(S+M) R-250*200**	TV-A29-12225020	1		
22	**Belt 348XL, W18M**	TV-A29-11034410-1	1		
23	**Rotor Bottom Cover ZL100-005**	TM-ZL100-005	1		
24	**Rotor Bottom Gasket ZL100-001**	TM-ZL100-001	1		
25	**Left cover**	TM-HCD180-PH-011	1		
26	**Copper nipple 3/8"*3/8"**	TV-A02-10020303	1		
27	**SUS Ball valve 3/8"**	TV-A08-00000003	1		
28	**Alarm (yellow flashing) N-3051 DC24V**	TV-B12-10N3051024	1		
29	**Buzzer PK-27A29EPQ (3~24V /DC)**	TV-B12-00PK27A29EPQ	1		
30	**Thermometer (0-200) 1/4"PT L=50**	TV-B07-0010020002	2		
31	**2.5"Process inlet tube**	TM-HCD180-029	1		
32	**2.5"Regen. outlet tube**	TM-HCD180-032	1		
33	**2.5"Process outlet tube**	TM-HCD-100-055	1		
34	**Drying temperature probe (1/8PT*50L*10M)**	TV-A14-00105040	1		
35	**Insulation cover of drying heater**	TM-FHD-100-N-004	1		
36	**Thermostatic control V2-BH-BLSD**	TV-B07-03000000V2	1		
37	**Drying Heater6.0KW AC265V/460V**	TM-HCD100-045	1	Drying Heater 6.0KW AC230V/400V	TM-HCD100-045-1
38	**Drying heater asbestos gasket**	TM-HCD100-055-01	1		
39	**Drying heater**	TM-HCD-200-N-010	1		
40	**Insulation cover of Regen. heater**	TM-HCD-200-N-004	1		
41	**Thermostatic control V2-BH-BLSD**	TV-B07-03000000V2	1		
42	**Regen Heater 4KW AC265V/460V**	TV-A42-0040000046	1	Regen Heater4KW AC230V/400V	TM-FCD-550D5-052 -385
43	**Regen. heater asbestos gasket**	TM-HCD100-054-01	1		
44	**Regen. heater**	TM-HCD-200-N-006	1		
45	**Rear cover**	TM-HCD180-PH-009	1		
46	**Right cover**	TM-HCD180-PH-010	1		
47	**Regen. temperature probe (1/8PT*50L*4M)**	TV-A14-00105040	1		
48	**Cooler HCD100~180**	TM-HCD180-603	1		
49	**3" Caster**	TV-A26-00003100	2		
	3" Caster w/brake	TV-A26-00003101	2		
50	**Bottom cover**	TM-HCD180-PH-001	1		
51	**Blower (DG-300-16) 0.75KW AC200~480V/50/60HZ**	TV-A21-03003293	1		

52	**Blower (DG-100-16) 0.18KW AC200~480V/50/60HZ**	TV-A21-03001293	1		
53	**Fixed plate of filter**	TM-HCD180-025	1		
54	**TWT motor reducer G-2N36-K**	TV-A40-1000TWTG2N36K	1		
	TWT motor mid-reducer G-2N10X-K	TV-A40-100TWTG2N10XK	1		
	TWT motor M-2IK6N-CV	TV-A40-10TWTM2IK6NCV	1		
55	**Snap for rotor**	TV-A29-14000001	1		
56	**Proximity switch TL-0.5MC1**	TV-B02-210TL05MC1	1		
57	**Synchronous wheel 20MM *20 gears**	TV-A29-13000315-1	1		
58	**Dew point meter aluminum block**	TM-SRD-20190529-001	1		
59	**Dew point meter fixed clip LDJ-015**	TM-LDJ-015	1		
60	**Dew point meter CDT210**	TV-A29-202CDT210	1		
61	**CONTROL BOX DOOR FASTENER MS1000-5) S1B4502 DEPTH:2MM**	TV-A18-001000-5-1	2		
62	**Handwheel switch FG-21E U4**	TV-B02-1100FG21E0	1		
63	**Contactor SC-E02PM-C 220V**	TV-B03-00000E02PM	1		
64	**Relay TK-E02-C(0.64~0.96A)**	TV-B03-01TKE02C-J	1	**Relay TK-E02-C(0.95~1.45A)**	TV-B03-01TKE02C-L
65	**Contactor SC-E02PM-C 220V**	TV-B03-00000E02PM	1		
66	**Relay TK-E02-C(2.8~4.2A)**	TV-B03-01TKE02C-R	1	**Relay TK-E02-C(4~6A)**	TV-B03-01TKE02C-S
67	**Breaker BO-100EB 50A**	TV-B02-0B0100EB50	1		
68	**Contactor SC-E04PM-C 220V**	TV-B03-00000E04PM	1	**Contactor SC-E1PM-C 220V**	TV-B03-00000E1PM0
69	**Contactor SC-E05PM-C 220V**	TV-B03-00000E05PM	1	**Contactor SC-E2PM-C 220V**	TV-B03-00000E2PM0
70	**Rotor speed control TWT SS-22 6W**	TV-A40-100TWTSS2225W	1		
71	**Fuse base FS-10**	TV-B10-03000FS-10	2		
72	**Transformer TP-BK-150VA**	TV-B04-460220V150-KL	1	NIL	
73	**PCB MD1581**	TV-B01-00010M1581-1	1		
74	**Orange hose ϕ2"**	TV-A30-066000002004-15	4		
75	**Orange hose ϕ2.5"**	TV-A30-066000002504-15	6		
76	**Key YS-08**	TV-A18-200YS-08	1		
77	**MACHINE BODY DOOR FASTENER MS1000-5(S1B4504) DEPTH:4MM**	TV-A18-001000-5-2	6		
78	**DRYER BLOWER INLET TUBE**	TM-HCD100-PH-032	1		
79	**DRYER BLOWER OUTLET TUBE**	TM-HCD100-031	1		
80	**REGEN BLOWER IN/OUTLET TUBE**	TM-SRD-HCD100-PH-035	2		

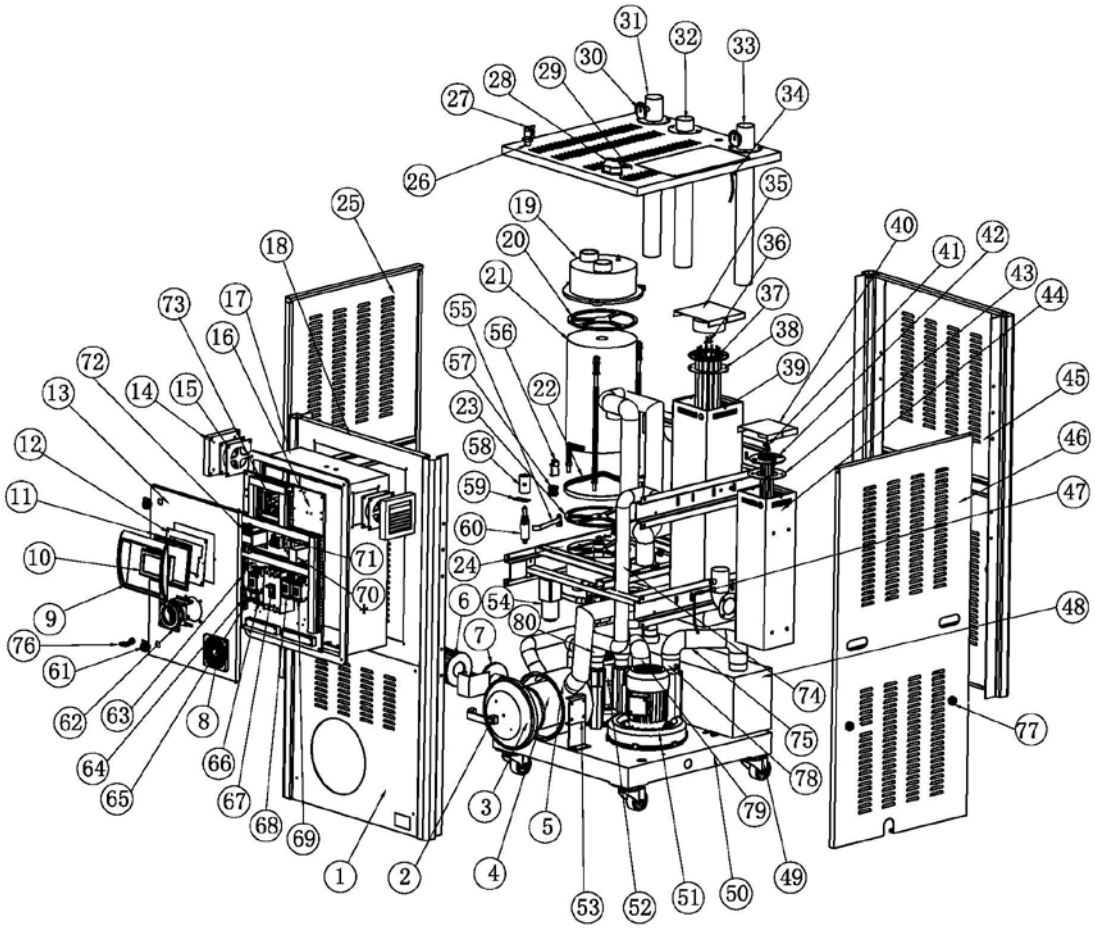

FX-180460				FX-180230	
POS	DESCRIPTION	FORMAX ITEM-NO	QTY	DESCRIPTION	FORMAX ITEM-NO
1	**Front cover on bottom**	TM-HCD180-PH-008	1		
2	**Handle**	TV-A45-0000000120	1		
3	**Filter lid**	TM-HCD180-PH-026X	1		
4	**Drying Filter (ϕ170*L150)**	TV-A32-0200170150	1		
5	**Filter hopper body**	TM-HCD180-024	1		
6	**Regen Filter (ϕ120*L100)**	TV-A32-0200122100	1		
7	**Air inlet port of regen. blower filter**	TM-HCD180-PH-033	1		
8	**Ventilation filter 120*120**	TV-A32-0101120120	1		
9	**Plastic frame**	TV-A19-01000010	1		
10	**LCD display**	TV-B01-HCD-HMI	1		
11	**HMI film**	TM-HCD180-PH-047	1		
12	**HMI fixed plate**	TM-HCD180-PH-046	1		
13	**Front movable cover on top 2**	TM-HCD180-PH-049	1		
14	**Blinds ventilation filter 105*105**	TV-A32-010000105105	1		
15	**Cooling fan (AC220V) 120*120**	TV-A28-0012001200	1		
16	**Bottom plate of control box**	TM-HCD180-013	1		
17	**HCD50 Control box**	TM-HCD180-PH-012	1		
18	**Front cover on top**	TM-HCD180-PH-007X	1		
19	**Rotor Top Cover ZL100-002**	TM-ZL100-002	1		
20	**Rotor Top Gasket ZL100-006-1**	TM-ZL100-006-1	1		
21	**Honeycomb rotor PP(S+M) R-250*400**	TV-A29-12230020	1		
22	**Belt 348XL,W18M**	TV-A29-11034410-1	1		
23	**Rotor Bottom Cover ZL100-005**	TM-ZL100-005	1		

24	**Rotor Bottom Gasket ZL100-001**	TM-ZL100-001	1		
25	**Left cover**	TM-HCD180-PH-011	1		
26	**Copper nipple 3/8"*3/8"**	TV-A02-10020303	1		
27	**SUS Ball valve 3/8"**	TV-A08-00000003	1		
28	**Alarm (yellow flashing) N-3051 DC24V**	TV-B12-10N3051024	1		
29	**Buzzer PK-27A29EPQ (3~24V /DC)**	TV-B12-00PK27A29EPQ	1		
30	**Thermometer (0-200) 1/4"PT L=50**	TV-B07-0010020002	2		
31	**2.5"Process inlet tube**	TM-HCD180-029	1		
32	**2.5"Regen. outlet tube**	TM-HCD180-032	1		
33	**2.5"Process outlet tube**	TM-HCD-100-055	1		
34	**Drying temperature probe (1/8PT*50L*10M)**	TV-A14-00105080	1		
35	**Insulation cover of drying heater**	TM-FHD-100-N-004	1		
36	**Thermostatic control V2-BH-BLSD**	TV-B07-03000000V2	1		
37	**Drying Heater 12.0KW AC265V/460V**	TM-SRD-HCD180-045	1	Drying Heater 12.0KW AC230V/440V	TM-SRD-HCD180-045-1
38	**Drying heater asbestos gasket**	TM-HCD100-055-01	1		
39	**Drying heater**	TM-HCD-200-N-010	1		
40	**Insulation cover of Regen. heater**	TM-HCD-200-N-004	1		
41	**Thermostatic control V2-BH-BLSD**	TV-B07-03000000V2	1		
42	**Regen Heater 5KW AC265V/460V**	TM-HCD180-610-1-46	1	Regen Heater 5KW AC230V/400V	TM-HCD180-610-1-26
43	**Regen. heater asbestos gasket**	TM-HCD100-054-01	1		
44	**Regen. heater**	TM-HCD-200-N-006	1		
45	**Rear cover**	TM-HCD180-PH-009	1		
46	**Right cover**	TM-HCD180-PH-010	1		
47	**Regen. temperature probe (1/8PT*50L*4M)**	TV-A14-00105040	1		
48	**Cooler HCD100~180**	TM-HCD180-603	1		
49	**3" Caster**	TV-A26-00003100	2		
	3" Caster w/brake	TV-A26-00003101	2		
50	**Bottom cover**	TM-HCD180-PH-001	1		
51	**Blower (DG-300-16) 2.2KW AC200~480V/50/60HZ**	TV-A21-03005293	1		
52	**Blower (DG-100-16) 0.4KW AC200~480V/50/60HZ**	TV-A21-03002293	1		
53	**Fixed plate of filter**	TM-HCD180-025	1		
54	**TWT motor reducer G-2N36-K**	TV-A40-1000TWTG2N36K	1		
	TWT motor mid-reducer G-2N10X-K	TV-A40-100TWTG2N10XK	1		
	TWT motor M-2IK6N-CV	TV-A40-10TWTM2IK6NCV	1		
55	**Snap for rotor**	TV-A29-14000001	1		
56	**Proximity switch TL-0.5MC1**	TV-B02-210TL05MC1	1		
57	**Synchronous wheel 20MM *20 gears**	TV-A29-13000315-1	1		
58	**Dew point meter aluminum block**	TM-SRD-20190529-001	1		
59	**Dew point meter fixed clip LDJ-015**	TM-LDJ-015	1		
60	**Dew point meter CDT210**	TV-A29-202CDT210	1		
61	**CONTROL BOX DOOR FASTENER MS1000-5) S1B4502 DEPTH:2MM**	TV-A18-001000-5-1	2		
62	**Handwheel switch FG-21E U4**	TV-B02-1100FG21E0	1		
63	**Contactor SC-E02PM-C 220V**	TV-B03-00000E02PM	1		
64	**Relay TK-E02-C(1.4~2.2A)**	TV-B03-01TKE02C-M	1	**Relay TK-E02-C(2.8~4.2A)**	TV-B03-01TKE02C-R
65	**Contactor SC-E04PM-C 220V**	TV-B03-00000E04PM	1		
66	**Relay TK-E02-C(5~8A)**	TV-B03-01TKE02C-T	1	**Relay**	TV-B03-01TKE

				TK-E02-C(9~13A)	02C-W
67	**Breaker BO-100EB 50A**	TV-B02-0B0100EB50	1	**Breaker BO-100EB 100A**	TV-B02-0B010 0EB100
68	**Contactor SC-E05PM-C 220V**	TV-B03-00000E05PM	1	**Contactor SC-E2PM-C 220V**	TV-B03-00000 E2PM0
69	**Contactor SC-E2PM-C 220V**	TV-B03-00000E2PM0	1	**Contactor SC-E3PM-C 220V**	TV-B03-00000 E3PM0
70	**Rotor speed control TWT SS-22 6W**	TV-A40-100TWTSS2225W	1		
71	**Fuse base FS-10**	TV-B10-03000FS-10	2		
72	**Transformer TP-BK-150VA**	TV-B04-460220V150-KL	1	NIL	
73	**PCB MD1581**	TV-B01-00010M1581-1	1		
74	**Orange hose ϕ2"**	TV-A30-066000002004-15	4		
75	**Orange hose ϕ2.5"**	TV-A30-066000002504-15	6		
76	**Key YS-08**	TV-A18-200YS-08	1		
77	**MACHINE BODY DOOR FASTENER MS1000-5(S1B4504) DEPTH:4MM**	TV-A18-001000-5-2	6		
78	**DRYER BLOWER INLET TUBE**	TM-HCD180-PH-050	1		
79	**DRYER BLOWER OUTLET TUBE**	TM-HCD180-031	1		
80	**REGEN BLOWER IN/OUTLET TUBE**	TM-HCD180-PH-035	2		

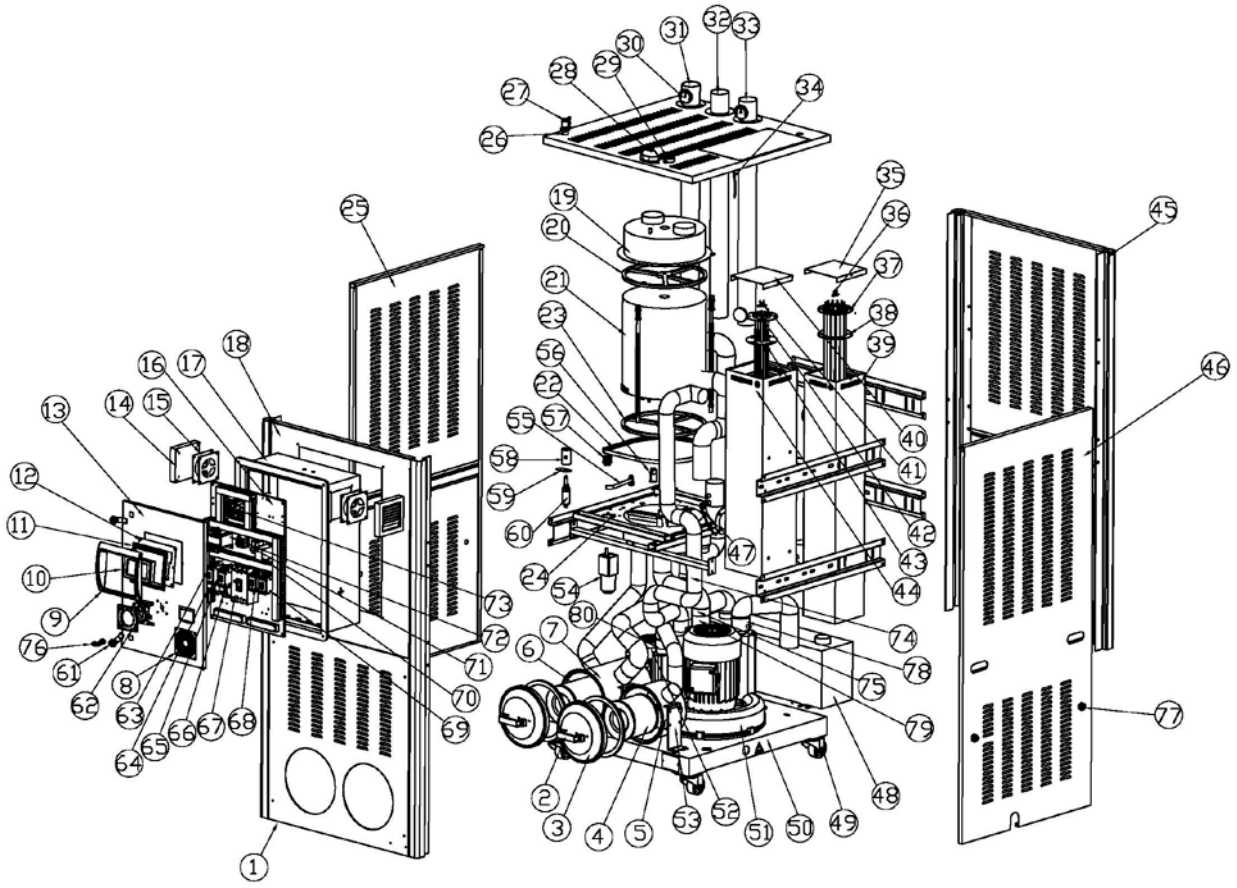

FX-300460			
POS	**DESCRIPTION**	**FORMAX ITEM-NO**	**QTY**
1	**Front cover on bottom**	HCD300-008X	1
2	**Handle**	TV-A45-0000000120	2
3	**Filter lid**	TM-HCD180-PH-026X	1
4	**Regen Filter (ϕ170*L150)**	TV-A32-0200170150	1
5	**Filter hopper body**	TM-HCD300-024	1

6	**Drying Filter (ϕ170*L300)**	TV-A32-0200170300	1
7	**Air inlet port of regen. blower filter**	TM-HCD300-024A	1
8	**Ventilation filter 120*120**	TV-A32-0101120120	1
9	**Plastic frame**	TV-A19-01000010	1
10	**LCD display**	TV-B01-HCD-HMI	1
11	**HMI film**	TM-HCD180-PH-047	1
12	**HMI fixed plate**	TM-HCD180-PH-046	1
13	**Front movable cover on top 2**	TM-HCD180-PH-049	1
14	**Blinds ventilation filter 105*105**	TV-A32-010000105105	2
15	**Cooling fan (AC220V) 120*120**	TV-A28-0012001200	2
16	**Bottom plate of control box**	TM-HCD180-013	1
17	**HCD50 Control box**	TM-HCD300-PH-012	1
18	**Front cover on top**	TM-HCD300-007	1
19	**Rotor Top Cover ZL300-002**	TM-ZL300-002	1
20	**Rotor Top Gasket ZL300-006**	TM-ZL300-006	1
21	**Honeycomb rotor PP(S+M) R-350*200**	TV-A29-12234020	1
22	**Belt 480XL , W18M**	TV-A29-11048012	1
23	**Rotor Bottom Cover ZL100-005**	TM-ZL300-005	1
24	**Rotor Bottom Gasket ZL100-001**	TM-ZL300-001	1
25	**Left cover**	TM-HCD300-PH-011	1
26	**Copper nipple 3/8"*3/8"**	TV-A02-10020303	1
27	**SUS Ball valve 3/8"**	TV-A08-00000003	1
28	**Alarm (yellow flashing) N-3051 DC24V**	TV-B12-10N3051024	1
29	**Buzzer PK-27A29EPQ (3~24V /DC)**	TV-B12-00PK27A29EPQ	1
30	**Thermometer (0-200) 1/4"PT L=50**	TV-B07-0010020002	2
31	**3"Process inlet tube**	TM-HCD300-029	1
32	**3"Regen. outlet tube**	TM-HCD300-032	1
33	**3"Process outlet tube**	TM-HCD300-PH-015	1
34	**Drying temperature probe (1/8PT*50L*10M)**	TV-A14-00105080	1
35	**Insulation cover of drying heater**	TM-FHD-100-N-004	1
36	**Thermostatic control V2-BH-BLSD**	TV-B07-03000000V2	1
37	**Drying Heater 15.0KW AC265V/460V**	TM-SRD-HCD300-PH-045-02	1
38	**Drying heater asbestos gasket**	TM-HCD100-055-01	1
39	**Drying heater**	TM-HCD-300-N-009X	1
40	**Insulation cover of Regen. heater**	TM-HCD-300-N-003	1
41	**Thermostatic control V2-BH-BLSD**	TV-B07-03000000V2	1
42	**Regen Heater 8.5KW AC265V/460V**	TM-HCD400-610-1-46	1
43	**Regen. heater asbestos gasket**	TM-D40000A-610-4	1
44	**Regen. heater**	TM-HCD-300-N-005X	1
45	**Rear cover**	TM-HCD300-PH-009	1
46	**Right cover**	TM-HCD300-PH-010	1
47	**Regen. temperature probe (1/8PT*50L*4M)**	TV-A14-00105040	1
48	**Cooler HCD300**	TM-HCD300-603	1
49	**3" Caster**	TV-A26-00003100	2
	3" Caster w/brake	TV-A26-00003101	2
50	**Bottom cover**	TM-HCD300-PH-001	1
51	**Blower (DG-600-26) 3.4KW AC200~480V/50/60HZ**	TV-A21-03006293	1
52	**Blower (DG-300-16) 0.75KW AC200~480V/50/60HZ**	TV-A21-03003293	1
53	**Fixed plate of filter**	TM-HCD180-025	4
54	**TWT motor 4GN 10X**	TV-A40-1000TWT4GN10X	1
	TWT motor 4GN 75K	TV-A40-1000TWT4GN75K	1

	TWT motor 4IK 25RGN-C	TV-A40-1TWT4IK25RGNC	1
55	**Snap for rotor**	TV-A29-14000001	1
56	**Proximity switch TL-0.5MC1**	TV-B02-210TL05MC1	1
57	**Synchronous wheel 21MM *22 gears**	TV-A29-13000655-1	1
58	**Dew point meter aluminum block**	TM-SRD-20190529-001	1
59	**Dew point meter fixed clip LDJ-015**	TM-LDJ-015	1
60	**Dew point meter CDT210**	TV-A29-202CDT210	1
61	**CONTROL BOX DOOR FASTENER MS1000-5) S1B4502 DEPTH:2MM**	TV-A18-001000-5-1	2
62	**Handwheel switch FG-21E U4**	TV-B02-1100FG21E0	1
63	**Contactor SC-E02PM-C 220V**	TV-B03-00000E02PM	1
64	**Relay TK-E02-C(2.8~4.2A)**	TV-B03-01TKE02C-R	1
65	**Contactor SC-E04PM-C 220V**	TV-B03-00000E04PM	1
66	**Relay TK-E02-C(7~11A)**	TV-B03-01TKE02C-V	1
67	**Breaker BO-100EB 100A**	TV-B02-0B0100EB100	1
68	**Contactor SC-E1PM-C 220V**	TV-B03-00000E1PM0	1
69	**Contactor SC-E3PM-C 220V**	TV-B03-00000E3PM0	1
70	**Rotor speed control TWT SS-22 25W**	TV-A40-100TWTSS2225W	1
71	**Fuse base FS-10**	TV-B10-03000FS-10	2
72	**Transformer TP-BK-150VA**	TV-B04-460220V150-KL	1
73	**PCB MD1581**	TV-B01-00010M1581-1	1
74	**Orange hose ϕ2.5"**	TV-A30-066000002504-15	4
75	**Orange hose ϕ3"**	TV-A30-066000003004-15	6
76	**Key YS-08**	TV-A18-200YS-08	1
77	**MACHINE BODY DOOR FASTENER MS1000-5(S1B4504) DEPTH:4MM**	TV-A18-001000-5-2	6
78	**DRYER BLOWER INLET TUBE**	TM-HCD300-PH-050	1
79	**DRYER BLOWER OUTLET TUBE**	TM-HCD300-031	1
80	**REGEN BLOWER IN/OUTLET TUBE**	TM-HCD100-031	2

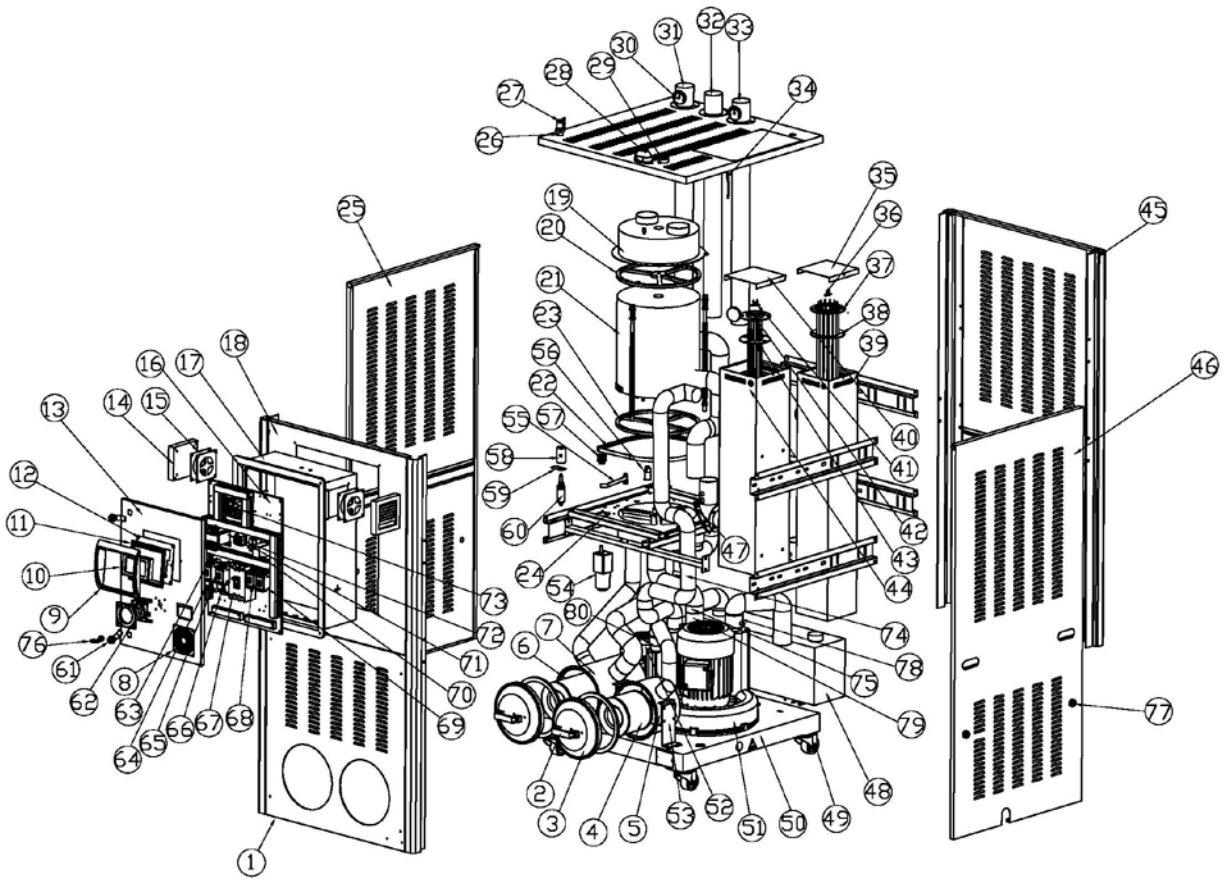

FX-400460			
POS	**DESCRIPTION**	**FORMAX ITEM-NO**	**QTY**
1	**Front cover on bottom**	HCD300-008X	1
2	**Handle**	TV-A45-0000000120	2
3	**Filter lid**	TM-HCD180-PH-026X	1
4	**REGEN Filter (ϕ170*L150)**	TV-A32-0200170150	1
5	**Filter hopper body**	TM-HCD300-024	1
6	**DRYING Filter (ϕ170*L300)**	TV-A32-0200170300	1
7	**Air inlet port of regen. blower filter**	TM-HCD300-024A	1
8	**Ventilation filter 120*120**	TV-A32-0101120120	1
9	**Plastic frame**	TV-A19-01000010	1
10	**LCD display**	TV-B01-HCD-HMI	1
11	**HMI film**	TM-HCD180-PH-047	1
12	**HMI fixed plate**	TM-HCD180-PH-046	1
13	**Front movable cover on top**	TM-HCD180-PH-049	1
14	**Blinds ventilation filter 105*105**	TV-A32-010000105105	2
15	**Cooling fan (AC220V) 120*120**	TV-A28-0012001200	2
16	**Bottom plate of control box**	TM-HCD180-013	1
17	**HCD50 Control box**	TM-HCD300-PH-012	1
18	**Front cover on top**	TM-HCD300-007	1
19	**Rotor Top Cover ZL300-002**	TM-ZL300-002	1
20	**Rotor Top Gasket ZL300-006**	TM-ZL300-006	1
21	**Honeycomb rotor PP(S+M) R-350*400**	TV-A29-12235040	1
22	**Belt 480XL, W18M**	TV-A29-11048012	1
23	**Rotor Bottom Cover ZL100-005**	TM-ZL300-005	1
24	**Rotor Bottom Gasket ZL100-001**	TM-ZL300-001	1

25	**Left cover**	TM-HCD300-PH-011	1
26	**Copper nipple 3/8"*3/8"**	TV-A02-10020303	1
27	**SUS Ball valve 3/8"**	TV-A08-00000003	1
28	**Alarm (yellow flashing) N-3051 DC24V**	TV-B12-10N3051024	1
29	**Buzzer PK-27A29EPQ (3~24V /DC)**	TV-B12-00PK27A29EPQ	1
30	**Thermometer (0-200) 1/4"PT L=50**	TV-B07-0010020002	2
31	**3"Process inlet tube**	HCD300-029	1
32	**3"Regen. outlet tube**	TM-HCD300-032	1
33	**3"Process outlet tube**	HCD300-PH-015	1
34	**Drying temperature probe (1/8PT*50L*10M)**	TV-A14-00105080	1
35	**Insulation cover of drying heater**	TM-FHD-100-N-004	1
36	**Thermostatic control V2-BH-BLSD**	TV-B07-03000000V2	1
37	**Drying Heater 18.0KW AC265V/460V**	TM-SRD-HCD400-PH-045-02	1
38	**Drying heater asbestos gasket**	TM-HCD100-055-01	1
39	**Drying heater**	TM-HCD-300-N-009X	1
40	**Insulation cover of Regen. heater**	TM-HCD-300-N-003	1
41	**Thermostatic control V2-BH-BLSD**	TV-B07-03000000V2	1
42	**Regen Heater 8.5KW AC265V/460V**	TM-HCD400-610-1-46	1
43	**Regen. heater asbestos gasket**	TM-D40000A-610-4	1
44	**Regen. heater**	TM-HCD-300-N-005X	1
45	**Rear cover**	TM-HCD300-PH-009	1
46	**Right cover**	TM-HCD300-PH-010	1
47	**Regen. temperature probe (1/8PT*50L*4M)**	TV-A14-00105040	1
48	**Cooler HCD300**	TM-HCD300-603	1
49	**3" Caster**	TV-A26-00003100	2
	3" Caster w/brake	TV-A26-00003101	2
50	**Bottom cover**	TM-HCD300-PH-001	1
51	**Blower (DG-800-16) 5.5KW AC200~480V/50/60HZ**	TV-A21-03007293	1
52	**Blower (DG-300-16) 0.75KW AC200~480V/50/60HZ**	TV-A21-03003293	1
53	**Fixed plate of filter**	TM-HCD180-025	1
54	**TWT motor 4GN 10X**	TV-A40-1000TWT4GN10X	1
	TWT motor 4GN 75K	TV-A40-1000TWT4GN75K	1
	TWT motor 4IK 25RGN-C	TV-A40-1TWT4IK25RGNC	1
55	**Snap for rotor**	TV-A29-14000001	1
56	**Proximity switch TL-0.5MC1**	TV-B02-210TL05MC1	1
57	**Synchronous wheel 21MM *20 gears**	TV-A29-13000655-1	1
58	**Dew point meter aluminum block**	TM-SRD-20190529-001	1
59	**Dew point meter fixed clip LDJ-015**	TM-LDJ-015	1
60	**Dew point meter CDT210**	TV-A29-202CDT210	1
61	**CONTROL BOX DOOR FASTENER MS1000-5) S1B4502 DEPTH:2MM**	TV-A18-001000-5-1	2
62	**Handwheel switch FG-21E U4**	TV-B02-1100FG21E0	1
63	**Contactor SC-E02PM-C 220V**	TV-B03-00000E02PM	1
64	**Relay TK-E02-C(2.8~4.2A)**	TV-B03-01TKE02C-R	1
65	**Contactor SC-E05PM-C 220V**	TV-B03-00000E05PM	1
66	**Relay TK-E02-C(12~18A)**	TV-B03-01TKE02C-X	1
67	**Breaker BO-100EB 100A**	TV-B02-0B0100EB100	1
68	**Contactor SC-E1PM-C 220V**	TV-B03-00000E1PM0	1
69	**Contactor SC-E3PM-C 220V**	TV-B03-00000E3PM0	1
70	**Rotor speed control TWT SS-22 25W**	TV-A40-100TWTSS2225W	1
71	**Fuse base FS-10**	TV-B10-03000FS-10	2

72	**Transformer TP-BK-150VA**	TV-B04-460220V150-KL	1
73	**PCB MD1581**	TV-B01-00010M1581-1	1
74	**Orange hose ϕ2.5"**	TV-A30-066000002504-15	4
75	**Orange hose ϕ3"**	TV-A30-066000003004-15	6
76	**Key YS-08**	TV-A18-200YS-08	1
77	**MACHINE BODY DOOR FASTENER MS1000-5(S1B4504) DEPTH:4MM**	TV-A18-001000-5-2	6
78	**DRYER BLOWER INLET TUBE**	TM-HCD400-PH-050	1
79	**DRYER BLOWER OUTLET TUBE**	TM-HCD400-031	1
80	**REGEN BLOWER IN/OUTLET TUBE**	TM-HCD100-031	2

Stock Spare Part List

NAME	CMH	VOL	Q'TY	U/M	PART NUMBER	SPECIFICATION	PHOTO REFERENCE
DRYING BLOWER	50	230	1	SET	TV-A21-03002293	(DG-200-16/HB-229)0.4KW AC200~480V/50/60HZ	
	100	230	1		TV-A21-03003293	(DG-300-16/HB-329)0.75KW AC200~480V/50/60HZ	
	100	***460***	1		TV-A21-03003293	(DG-300-16/HB-329)0.75KW AC200~480V/50/60HZ	
	180	230	1		TV-A21-03005293	(DG-600-16/HB-529)2.2KW AC200~480V/50/60HZ	
	180	***460***	1		TV-A21-03005293	(DG-600-16/HB-529)2.2KW AC200~480V/50/60HZ	
	300	***460***	1		TV-A21-03006293	(DG-600-26/HB-629)3.4KW AC200~480V/50/60HZ	
	400	***460***	1		TV-A21-03007293	(DG-800-16/HB-729)5.5KW AC200~480V/50/60HZ	
REGEN. BLOWER	50	230	1	SET	TV-A21-03001293	(DG-100-16/HB-129)0.18KW AC200~480V/50/60HZ	
	100	230	1		TV-A21-03001293	(DG-100-16/HB-129)0.18KW AC200~480V/50/60HZ	
	100	***460***	1		TV-A21-03001293	(DG-100-16/HB-129)0.18KW AC200~480V/50/60HZ	
	180	230	1		TV-A21-03002293	(DG-200-16/HB-229)0.4KW AC200~480V/50/60HZ	
	180	***460***	1		TV-A21-03002293	(DG-200-16/HB-229)0.4KW AC200~480V/50/60HZ	
	300	***460***	1		TV-A21-03003293	(DG-300-16/HB-329)0.75KW AC200~480V/50/60HZ	
	400	***460***	1		TV-A21-03003293	(DG-300-16/HB-329)0.75KW AC200~480V/50/60HZ	

DRYING HEATER	50	230	1	SET	TM-FCD-550D5-052-385	4KW 230V/60HZ/3P	
	100	230	1		TM-HCD100-045-1	6.0KW AC230/60HZ HCD100-045	
	100	***460***	1		TM-HCD100-045	6.0KW AC460/60HZ HCD100-045	

	180	230	1		TM-SRD-HCD180-045-1	12KW AC230/60HZ SRD-HCD180-045	
	180	***460***	1		TM-SRD-HCD180-045	12KW AC460/60HZ SRD-HCD180-045	
	300	***460***	1		TM-SRD-HCD300-PH-045-02	15KW AC460V/60HZ	
	400	***460***	1		TM-SRD-HCD400-PH-045-02	18KW AC460V/60HZ	
REGEN. HEATER	50	230	1	SET	TV-A42-0025000038	2.5KW 220/480V/60HZ/3P	
	100	230	1		TM-FCD-550D5-052-385	4KW 230V/60HZ/3P	
	100	***460***	1		TV-A42-0040000046	4KW 460V/60HZ/3P	
	180	230	1		TM-HCD180-610-1-26	5.0KW 230V/60HZ/3P	
	180	***460***	1		TM-HCD180-610-1-46	5.0KW 460V/60HZ/3P	
	300	***460***	1		TM-HCD400-610-1-46	8.5KW 460V/60HZ/3P	
	400	***460***	1		TM-HCD400-610-1-46	8.5KW 460V/60HZ/3P	
DRYING FILTER	50	230	1	PC	TV-A32-0200170150	D180A-602 170*150mm	
	100	230	1				
	100	***460***	1				
	180	230	1				
	180	***460***	1				
	300	***460***	1		TV-A32-0200170300	170*300mm	
	400	***460***	1				
REGEN. FILTER	50	230	1	PC	TV-A32-0200122100	D050A-606 120*100mm	
	100	230	1				
	100	***460***	1				
	180	230	1				
	180	***460***	1				
	300	***460***	1		TV-A32-0200170150	D180A-602 170*150mm	
	400	***460***	1				

DESICCANT ROTOR (W/O SHELL)	50	230	1	PC	TV-A29-12215020	PP(S+M) R-150*200 (50CMH)	
	100	230	1		TV-A29-12225020	PP(S+M) R-250*200 (100CMH)	

	100	***460***	1				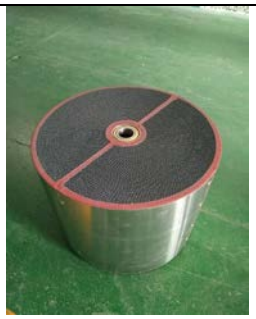
	180	230	1		TV-A29-12230020	PP(S+M)R-250*400/old 300*200/new (180CMH)	
	180	***460***	1				
	300	***460***	1		TV-A29-12234020	PP(S+M)R-350*200 (300CMH)	
	400	***460***	1		TV-A29-12235040	PP(S+M)R-350*400 (400CMH)	
ROTOR MOTOR (INCL. SPEED ADJUSTMENT)	50	230	1	SET	TV-A40-1000TWTG2N36K TV-A40-100TWTG2N10XK TV-A40-10TWTM2IK6NCV TV-A40-1TWTSS2I6AC6W	G-2N36-K G-2N10X-K M-2IK6N-CV SS-2I6A-C 6W	
	100	230	1				
	100	***460***	1				
	180	230	1				
	180	***460***	1				
	300	***460***	1		TV-A40-1000TWT4GN10X TV-A40-1000TWT4GN75K TV-A40-100TWTSS2225W TV-A40-1TWT4IK25RGNC	4GN 10X (for 400CMH） 4GN 75K (for 400CMH） SS-22 25W (for 400CMH） 4IK 25RGN-C (for 400CMH)	
	400	***460***	1				
ORANGE HOSE (CONNECT DRYING AND REGEN. BLOWER INSIDE）	50	230	1	PC	TV-A30-066000001504-1	φ1.5" *6M	
	100	230	1		TV-A30-066000002004-15	φ2" *4M	
			1		TV-A30-066000002504-15	φ2.5" *6M	
	100	***460***	1		TV-A30-066000002004-15	φ2" *4M	
			1		TV-A30-066000002504-15	φ2.5" *6M	
	180	230	1		TV-A30-066000002004-15	φ2" *4M	
			1		TV-A30-066000002504-15	φ2.5" *6M	
	180	***460***	1		TV-A30-066000002004-15	φ2" *4M	
			1		TV-A30-066000002504-15	φ2.5" *6M	
	300	***460***	1		TV-A30-066000002504-15	φ2.5" *4M	
			1		TV-A30-066000003004-15	Φ3" *6M	
	400	***460***	1		TV-A30-066000002504-15	φ2.5" *4M	
			1		TV-A30-066000003004-15	Φ3" *6M	

ORANGE HOSE (PROCESS OUTLET AND INLET)	50	230	1	PC	TV-A30-066000002004-15	φ2" *4M	
	100	230	1		TV-A30-066000002504-15	φ2.5" *4M	
	100	***460***	1				

	180	230	1				
	180	***460***	1				
	300	***460***	1		TV-A30-066000003004-15	φ3.0" *4M	
	400	***460***	1		TV-A30-066000003004-15	φ3.0" *4M	
COOLER	50	230	1	SET	TM-HCD050-603	HCD050-603 DO50A-603	
	100	230	1		TM-HCD180-603	HCD180-610-3 D180A-603	
	100	***460***	1				
	180	230	1				
	180	***460***	1				
	300	***460***	1		TM-HCD300-603	HCD300-610-3 D300A-603	
	400	***460***	1				
G.M.H. REINFORCED HOSE (CONNECT COOLING WATER)	50	230	10	M	TV-A30-080300000006 TV-A30-080300000008	3/4"(50M/ROLL)	
	100	230	10			1"(50M/ROLL)	
	100	***460***	10				
	180	230	10				
	180	***460***	10				
	300	***460***	10				
	400	***460***	10				
PCB	50	230	1	SET	TV-B01-00010M1581-1	M1581 230V/480V/50HZ/60HZ	
	100	230	1		TV-B01-00010M1581-1	M1581 230V/480V/50HZ/60HZ	
	100	***460***	1		TV-B01-00010M1581-1	M1581 230V/480V/50HZ/60HZ	
	180	230	1		TV-B01-00010M1581-1	M1581 230V/480V/50HZ/60HZ	
	180	***460***	1		TV-B01-00010M1581-1	M1581 230V/480V/50HZ/60HZ	
	300	***460***	1		TV-B01-00010M1581-1	M1581 230V/480V/50HZ/60HZ	
	400	***460***	1		TV-B01-00010M1581-1	M1581 230V/480V/50HZ/60HZ	

HMI	50	230	1	SET	TV-B01-HCD-HMI	LCD Display	
	100	230	1				
	100	***460***	1				

	180	230	1				
	180	***460***	1				
	300	***460***	1				
	400	***460***	1				

DEWPOINT METER (PROBE)	50	230	1	SET	TV-A29-202CDT210	CDT210(-80..+20°C) PROBE	
	100	230	1				
	100	***460***	1				
	180	230	1				
	180	***460***	1				
	300	***460***	1				
	400	***460***	1				
THERMOCOUPLE	50	230	1	PC	TV-A14-00105040	(1/8PT*50L*4M)	
	100	230	1				
	100	***460***	1				
	180	230	1		TV-A14-00105080	（1/8PT*50L*10M）	
	180	***460***	1				
	300	***460***	1				
	400	***460***	1				
TRANSFORMER	50	230	1	PC	N/A	N/A	
	100	230	1		N/A	N/A	
	100	***460***	1		TV-B04-460220V150-KL	460V TO AC220V/150VA	
	180	230	1		N/A	N/A	
	180	***460***	1		TV-B04-460220V150-KL	460V TO AC220V/150VA	
	300	***460***	1		TV-B04-460220V150-KL	460V TO AC220V/150VA	
	400	***460***	1		TV-B04-460220V150-KL	460V TO AC220V/150VA	
BREAKER	50	230	1	PC	TV-B02-0B0100EB50	BO-100EB 50A	
	100	230	1				
	100	***460***	1				

	180	230	1		TV-B02-0B0100EB100	BO-100EB 100A	
	180	***460***	1		TV-B02-0B0100EB50	BO-100EB 50A	
	300	***460***	1		TV-B02-0B0100EB100	BO-100EB 100A	
	400	***460***	1		TV-B02-0B0100EB100	BO-100EB 100A	

VENTILATION FAN (IN CONTROL BOX)	50	230	1	SET	TV-A28-0012001200	120*120mm	
	100	230	1				
	100	***460***	1				
	180	230	1				
	180	***460***	1				
	300	***460***	1				
	400	***460***	1				

CONTACTOR	50	230	1	PC	TV-B03-00000E02PM	SC-E02PM-C COIL 220V	
			1		TV-B03-00000E05PM	SC-E05PM-C COIL 220V	
			1		TV-B03-00000E1PM0	SC-E1PM-C COIL 220V	
	100	230	1		TV-B03-00000E02PM	SC-E02PM-C COIL 220V	
			1		TV-B03-00000E1PM0	SC-E1PM-C COIL 220V	
			1		TV-B03-00000E2PM0	SC-E2PM-C COIL 220V	
	100	***460***	1		TV-B03-00000E02PM	SC-E02PM-C COIL 220V	
			1		TV-B03-00000E04PM	SC-E04PM-C COIL 220V	
			1		TV-B03-00000E05PM	SC-E05PM-C COIL 220V	
	180	230	1		TV-B03-00000E02PM	SC-E02PM-C COIL 220V	
			1		TV-B03-00000E04PM	SC-E04PM-C COIL 220V	
			1		TV-B03-00000E2PM0	SC-E2PM-C COIL 220V	
			1		TV-B03-00000E3PM0	SC-E3PM-C COIL 220V	
		460	1		TV-B03-00000E02PM	SC-E02PM-C COIL 220V	
			1		TV-B03-00000E04PM	SC-E04PM-C COIL 220V	
			1		TV-B03-00000E05PM	SC-E05PM-C COIL 220V	
			1		TV-B03-00000E2PM0	SC-E2PM-C COIL 220V	
	300	***460***	1		TV-B03-00000E02PM	SC-E02PM-C COIL 220V	
			1		TV-B03-00000E04PM	SC-E04PM-C COIL 220V	
			1		TV-B03-00000E1PM0	SC-E1PM-C COIL 220V	
			1		TV-B03-00000E3PM0	SC-E3PM-C COIL 220V	
	400	*460*	1		TV-B03-00000E02PM	SC-E02PM-C COIL 220V	
			1		TV-B03-00000E05PM	SC-E05PM-C COIL 220V	
			1		TV-B03-00000E1PM0	SC-E1PM-C COIL 220V	
			1		TV-B03-00000E3PM0	SC-E3PM-C COIL 220V	
RELAY (HEATING OVERLOAD)	50	230	1	PC	TV-B03-01TKE02C-L	TK-E02-C(0.95~1.45A)	
					TV-B03-01TKE02C-N	TK-E02-C(1.7~2.6A)	
	100	230			TV-B03-01TKE02C-L	TK-E02-C(0.95~1.45A)	
					TV-B03-01TKE02C-S	TK-E02-C(4~6A)	
		460			TV-B03-01TKE02C-J	TK-E02-C(0.64~0.96A)	
					TV-B03-01TKE02C-R	TK-E02-C(2.8~4.2A)	
	180	230			TV-B03-01TKE02C-R	TK-E02-C(2.8~4.2A)	

					TV-B03-01TKE02C-W	TK-E02-C(9~13A)	
		460			TV-B03-01TKE02C-M	TK-E02-C(1.4~2.2A)	
					TV-B03-01TKE02C-T	TK-E02-C(5~8A)	
	300	***460***			TV-B03-01TKE02C-R	TK-E02-C(2.8~4.2A)	
					TV-B03-01TKE02C-V	TK-E02-C(7~11A)	
	400	*460*			TV-B03-01TKE02C-R	TK-E02-C(2.8~4.2A)	
					TV-B03-01TKE02C-X	TK-E02-C(12~18A)	

FUSE BASE/FUSE(GLASS)	50	230	1	PC	TV-B10-03000FS-10	FS-10	
			1		TV-B10-1200010030	1A/30mm	
	100	230	1		TV-B10-03000FS-10	FS-10	
			1		TV-B10-1200010030	1A/30mm	
		460	1		TV-B10-03000FS-10	FS-10	
			1		TV-B10-1200010030	1A/30mm	
	180	230	1		TV-B10-03000FS-10	FS-10	
			1		TV-B10-1200010030	1A/30mm	
		460	1		TV-B10-03000FS-10	FS-10	
			1		TV-B10-1200010030	1A/30mm	
	300	***460***	1		TV-B10-03000FS-10	FS-10	
			1		TV-B10-1200010030	1A/30mm	
	400	*460*	1		TV-B10-03000FS-10	FS-10	
			1		TV-B10-1200010030	1A/30mm	
BUZZER	50	230	1	PC	TV-B12-00PK27A29EPQ	(3~24V /DC)	
	100	230					
		460					
	180	230					
		460					
	300	***460***					
	400	*460*					
ALARM (YELLOW, FLASH)	50	230	1	PC	TV-B12-1003051024	LTE-3051 DC24V	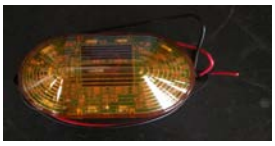
	100	230					
		460					
	180	230					
		460					
	300	***460***					
	400	*460*					
BALL VALVE	50	230	1	PC	TV-A08-10000010	1-1/4"	
	100	230	1		TV-A08-10000012	1-1/2"	
		460					
	180	230					
		460					
	300	***460***					
	400	*460*					
DOOR FASTENER	50	230	1	PC	TV-A18-001000-5-1	S1B4502 DEPTH:2MM	
	100	230					
		460					
	180	230					
		460					
	300	***460***					
	400	*460*					

CASTER(BLACK BASE)	50	230	1	PC	TV-A26-00003100	3"	
	100	230					
		460					
	180	230					
		460					

	300	***460***					
	400	460					
CASTER (BLACK BASE W/ BRAKE)	50	230	1		TV-A26-00003101		
	100	***230***					
		460					
	180	***230***					
		460					
	300	460					
	400	460					
PROXIMITY SWITCH	50	230	1	PC	TV-B02-210TL05MC1	TL-0.5MC1	
	100	230					
		460					
	180	230					
		460					
	300	***460***					
	400	460					
THERMOMETER	50	230	1	PC	TV-B07-0010020002	(0-200) 1/4"PT L=50 （DEGREE C/F）	
	100	230					
		460					
	180	230					
		460					
	300	***460***					
	400	460					
BELT	50	230	1	PC	TV-A29-10022810	50CHM 228XL, W10MM	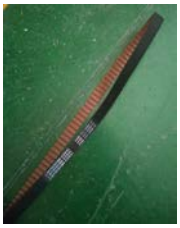
	100	230	1		TV-A29-11034410-1	DA18 (348XL, W18M)	
		460					
	180	230					
		460					
	300	***460***	1		TV-A29-11048012	DA30 (480L*W12.5), MODEL 480L	
	400	460					

SYNC. WHEEL	50	230	1	PC	TV-A29-13000315	W11MM(TM-RB-05) 31.5MM DIA. 20 GROOVE	
	100	230			TV-A29-13000315-1	W20MM 31.5MM DIA. 20 GROOVE	
		460					
	180	230					
		460					
	300	***460***	1		TV-A29-13000655-	USED WITH L BELT, 22 GROOVE, 21MM W, 65.5MM DIA.	
	400	460					
ROTOR FRAGMENT	50	230	1	PC	TV-A29-14000001	BLACK PART	
	100	230					
		460					
	180	230					
		460					
	300	***460***					
	400	460					