FORGED QUICK SET
ARCHING MOLD CLAMPS

6 STOCK SIZES

Fits mold flanges from .393 to 3.149 inches.

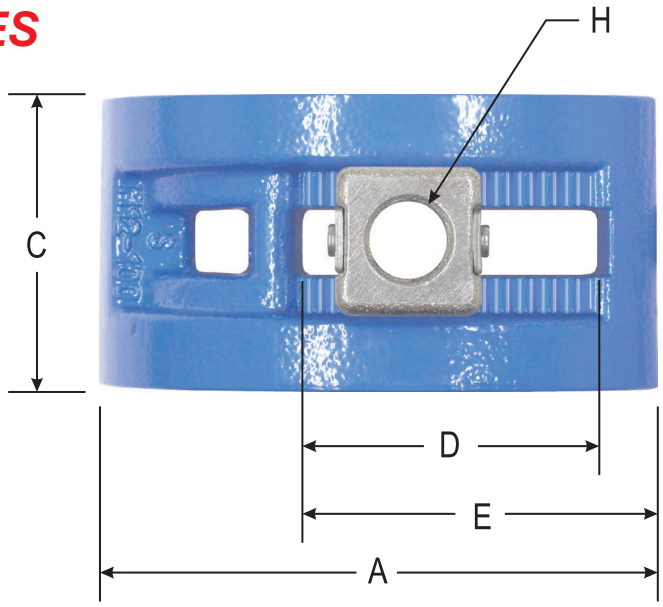

Hole I.D. is slightly over sized to fit bolts. Metric & American. (see table)

ALL BOLTS AVAILABLE FROM PPE STOCK! METRIC OR AMERICAN

Simply add the "J" dimension to your platen thread hole depth of thread to determine your bolt length. "J" dimension varies with mold flange height.

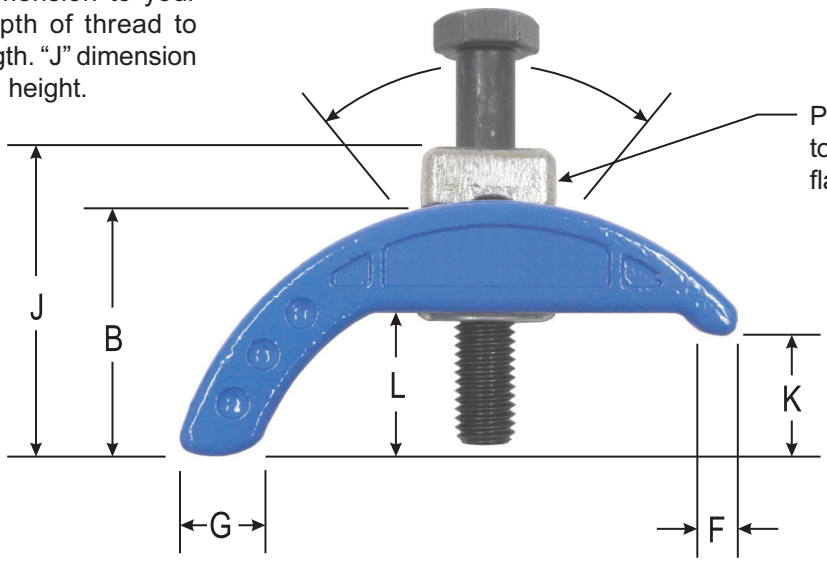

Pivoting washer allows heel & toe to self adjust to various mold flange heights. (see table)

Clamping Range

SPECIFICATIONS & PRICES

PART NO.	A Nominal Length	PRICE	B Height	C Width	D Slot	E	F Toe	G Heel	H Hole Size	J Height O.A.	L	K Clamping Range	FITS BOLTS	
M12-10004	4"	$11.40	1.771"	2"	2"	2-3/8"	.157"	.590"	.510"	2.093"	.930"	.393" - 1.378"	12mm	1/2"
M16-13005	5"	$19.00	2.519"	2-3/8"	2"	3-1/4"	.196"	.866"	.654"	2.895"	1.320"	.590" - 1.968"	16mm	5/8"
M16-15006	6"	$23.75	2.592"	2-5/8"	3-1/4"	3-7/8"	.196"	.944"	.654"	2.971"	1.367"	.590" - 2.165"	16mm	5/8"
M20-18007	7"	$28.75	3.149"	3-5/16"	4"	4-1/2"	.196"	1.023"	.837"	3.721"	1.850"	.787" - 2.362"	20mm	3/4"
M24-24095	9-1/2"	$65.50	4.330"	3-3/4"	4-9/16"	5-1/2"	.236"	1.378"	1.022"	4.671"	2.400"	.787" - 2.952"	24mm	1"
M30-25010	9-7/8"	$79.00	4.527"	4-1/8"	4-3/4"	5-3/4"	.275"	1.574"	1.258"	5.137"	2.670"	.787" - 3.149"	30mm	1-1/4"

PPE
PLASTIC PROCESS EQUIPMENT, INC.
EAST: 8303 CORPORATE PARK DRIVE
MACEDONIA, OHIO 44056-2300
216-367-7000 • FAX: 216-367-7022
TOLL FREE: 800-321-0562
WEST: 6385 MONTESSOURI STREET
LAS VEGAS, NEVADA 89113-1186
702-433-6385 • FAX: 702-433-6388
TOLL FREE: 800-258-8877
www.ppe.com
e-mail: sales@ppe.com
Toll Free: USA, Canada & Mexico
800-362-0706
Order Fax: 800-223-8305