WATER LINE CONNECTORS

MAKE CHANGES IN A JIFFY

MADE IN U.S.A.

SOCKETS & PLUGS ARE **ISO-9001** MANUFACTURED IN A QUALITY SYSTEM CERTIFIED FACILITY.

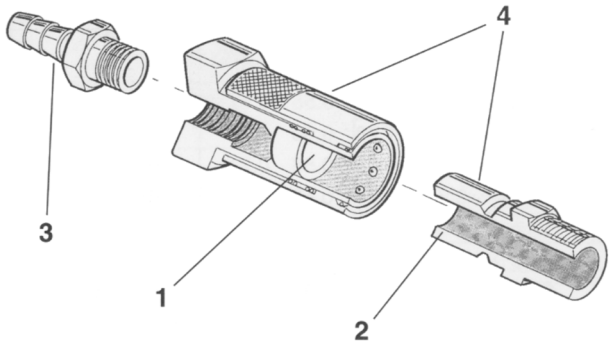

Features

1. Available with or without valves in the coupler. Nonvalved couplers have minimum flow resistance for maximum cooling. Valved couplers shut off automatically upon disconnect. Valved couplers can be used with either valved or non-valved nipples. A valved nipple, however, must be used with an "AV" coupler.
2. Nipples are designed to be recessed below mold surfaces to provide more efficient storage of molds and prevent damage to the nipple.
3. Widest choice of end fittings available, including straight, 45° or 90° with standard hose barb or Push-Lok barbs for easy installation.
4. Couplers and nipples are made of corrosion resistant brass and valved couplers or valved nipple have a Viton™ O-ring on poppet and Silicone interface seal as standard for use with water glycol (anti-freeze) type fluids commonly used in heat transfer systems.

PERFORMANCE

Media: ML H-5606 @ oil 100°F

Moldmate Series (1/4; 3/8; 1/2") Water Pressure Drop (Straight)

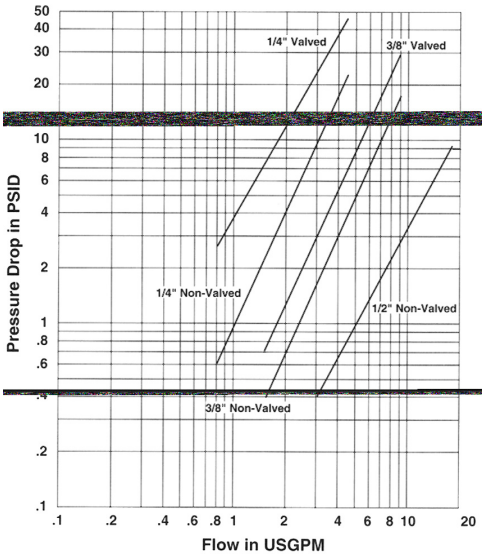

SPECIFICATIONS

	1/4	3/8	1/2
Working Pressure (psi)	200	200	200

Temperature Range:	
Standard Silicone Seal	- 90° to +400°F
Optional Viton Seal (for oil only)	- 20° to +400°F
Viton Seal (for water/glycol)	max. = +180°F
Material: Nipples and coupler bodies	Brass or Steel
Coupler Sleeves	Brass
Seals — Standard	Silicone
Optional	Viton

COLOR: SILICONE SEALS = ORANGE, VITON = BLACK

200 SERIES SPARE PARTS FOR 1/4" HOLE SIZE			
DESCRIPTION	**PART#**	**QUANTITY**	**PRICE**
SILICONE SEAL	W-20012	12/PACK	$ .75
SILICONE SEAL	W-200100	100/PACK	4.95
VITON SEAL	W-20012Y	12/PACK	3.15
VITON SEAL	W-200100Y	100/PACK	24.40
VALVE	V-200	EACH	.75
SPRING	VS-200	12/PACK	1.00
300 SERIES SPARE PARTS FOR 3/8" HOLE SIZE			
DESCRIPTION	**PART#**	**QUANTITY**	**PRICE**
SILICONE SEAL	W-30012	12/PACK	$1.00
SILICONE SEAL	W-300100	100/PACK	7.35
VITON SEAL	W-30012Y	12/PACK	5.30
VITON SEAL	W-300100Y	100/PACK	41.90
VALVE	V-300	EACH	1.50
SPRING	VS-300	12/PACK	2.00
500 SERIES SPARE PARTS FOR 1/2" HOLE SIZE			
DESCRIPTION	**PART#**	**QUANTITY**	**PRICE**
SILICONE SEAL	W-50012	12/PACK	$4.05
VITON SEAL	W-50012Y	12/PACK	10.65
VALVE	V-500	EACH	2.35
SPRING	VS-500	12/PACK	3.00

ISO-9002 MANUFACTURED IN A QUALITY SYSTEM CERTIFIED FACILITY.

SEAL

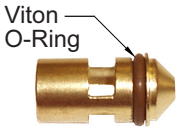

VALVE

SPRING

PLASTIC PROCESS EQUIPMENT, INC. www.ppe.com • e-mail: sales@ppe.com

PPE WEST 6385 Montessouri Street, Las Vegas, Nevada 89113
702-433-6385 • 800-258-8877 • Fax: 702-433-6388

PPE SOUTH 11218 Challenger Avenue, Odessa, Florida 33556
727-834-8888 • 800-282-6783 • Fax: 727-834-8873

PPE 8303 CORPORATE PARK DRIVE, MACEDONIA (Cleveland), OHIO 44056, USA
216-367-7000 • **Toll Free: 800-321-0562** • Fax: 216-367-7022 • Order Fax: 800-223-8305

Toll Free: USA, Canada & Mexico **800-362-0706**